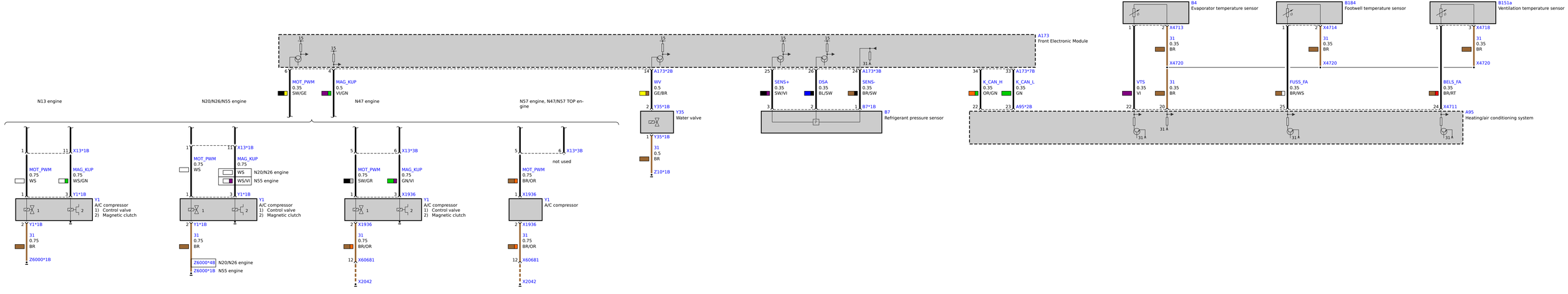
A173
Front Electronic Module
MOT_PWM
0.35
SW/GE
MAG_KUP
0.5
VI/GN
WV
0.5
GE/BR
SENS+
0.35
SW/VI
DSA
0.35
BL/SW
SENS-
0.35
BR/SW
K_CAN_H
0.35
OR/GN
K_CAN_L
0.35
GN
N13 engine
N20/N26/N55 engine
N47 engine
N57 engine, N47/N57 TOP engine
Y35
Water valve
B7
Refrigerant pressure sensor
A95*2B
B4
Evaporator temperature sensor
B184
Footwell temperature sensor
B151a
Ventilation temperature sensor
VTS
0.35
VI
FUSS_FA
0.35
BR/WS
BELS_FA
0.35
BR/RT
A95
Heating/air conditioning system
X13*1B
MOT_PWM
0.75
WS
MAG_KUP
0.75
WS/GN
Y1*1B
Y1
A/C compressor
1) Control valve
2) Magnetic clutch
31
0.75
BR
Z6000*1B
N20/N26 engine
N55 engine
Z6000*4B
X13*3B
X1936
X60681
X2042
not used
MOT_PWM
0.75
BR/OR
Y35*1B
Z10*1B
X4713
X4720
X4714
X4718
X4711