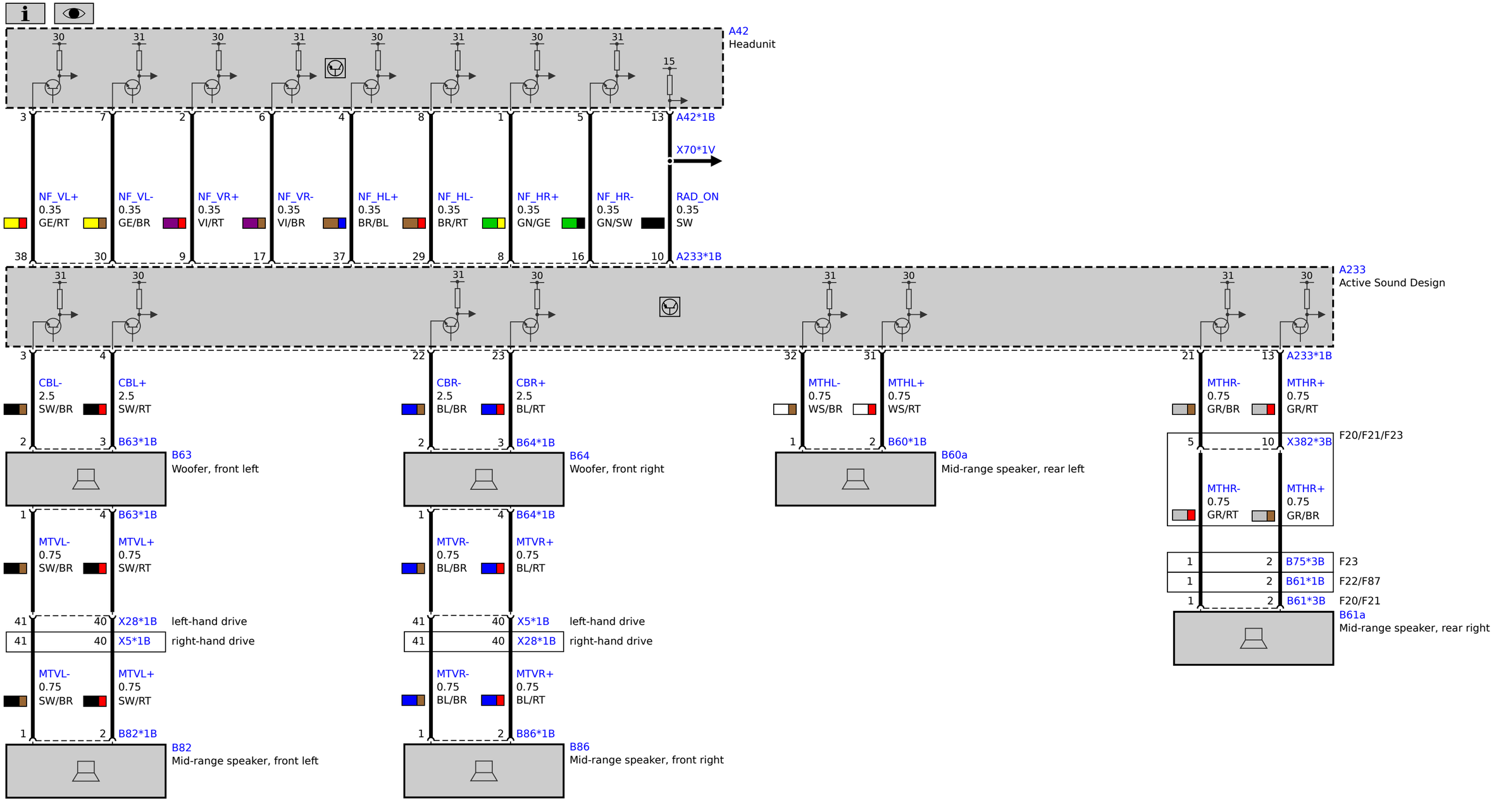
A42
Headunit
30
31
30
31
30
31
30
31
15
3
7
2
6
4
8
1
5
13
A42*1B
X70*1V
NF_VL+
0.35
GE/RT
NF_VL-
0.35
GE/BR
NF_VR+
0.35
VI/RT
NF_VR-
0.35
VI/BR
NF_HL+
0.35
BR/BL
NF_HL-
0.35
BR/RT
NF_HR+
0.35
GN/GE
NF_HR-
0.35
GN/SW
RAD_ON
0.35
SW
38
30
9
17
37
29
8
16
10
A233*1B
A233
Active Sound Design
31
30
31
30
31
30
31
30
3
4
CBL-
2.5
SW/BR
CBL+
2.5
SW/RT
2
3
B63*1B
B63
Woofer, front left
22
23
CBR-
2.5
BL/BR
CBR+
2.5
BL/RT
2
3
B64*1B
B64
Woofer, front right
32
31
MTHL-
0.75
WS/BR
MTHL+
0.75
WS/RT
1
2
B60*1B
B60a
Mid-range speaker, rear left
21
13
A233*1B
MTHR-
0.75
GR/BR
MTHR+
0.75
GR/RT
5
10
X382*3B
F20/F21/F23
MTHR-
0.75
GR/RT
MTHR+
0.75
GR/BR
1
4
B63*1B
MTVL-
0.75
SW/BR
MTVL+
0.75
SW/RT
41
40
X28*1B
left-hand drive
41
40
X5*1B
right-hand drive
MTVL-
0.75
SW/BR
MTVL+
0.75
SW/RT
1
2
B82*1B
B82
Mid-range speaker, front left
1
4
B64*1B
MTVR-
0.75
BL/BR
MTVR+
0.75
BL/RT
41
40
X5*1B
left-hand drive
41
40
X28*1B
right-hand drive
MTVR-
0.75
BL/BR
MTVR+
0.75
BL/RT
1
2
B86*1B
B86
Mid-range speaker, front right
1
2
B75*3B
F23
1
2
B61*1B
F22/F87
1
2
B61*3B
F20/F21
B61a
Mid-range speaker, rear right