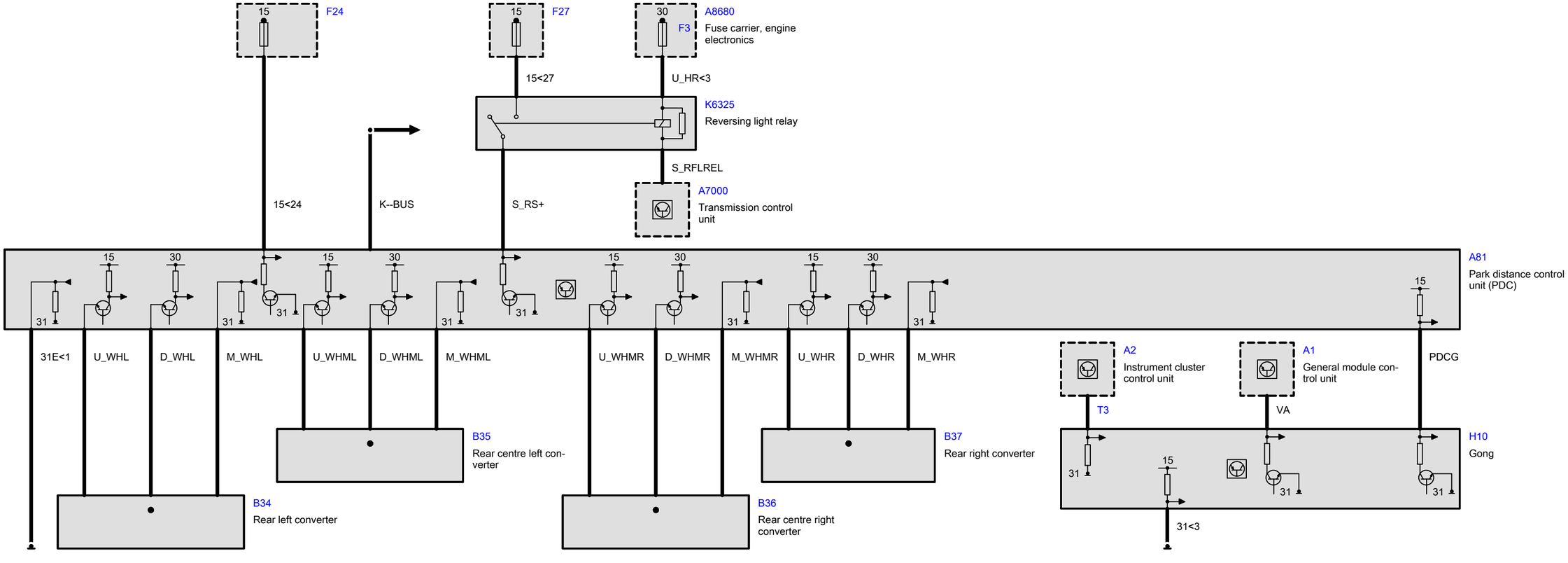
15
F24
15
F27
30
A8680
F3
Fuse carrier, engine electronics
15<27
U_HR<3
K6325
Reversing light relay
S_RFLREL
A7000
Transmission control unit
15<24
K--BUS
S_RS+
A81
Park distance control unit (PDC)
31E<1
U_WHL
D_WHL
M_WHL
U_WHML
D_WHML
M_WHML
U_WHMR
D_WHMR
M_WHMR
U_WHR
D_WHR
M_WHR
PDCG
A2
Instrument cluster control unit
A1
General module control unit
T3
VA
B35
Rear centre left converter
B37
Rear right converter
H10
Gong
B34
Rear left converter
B36
Rear centre right converter
31<3