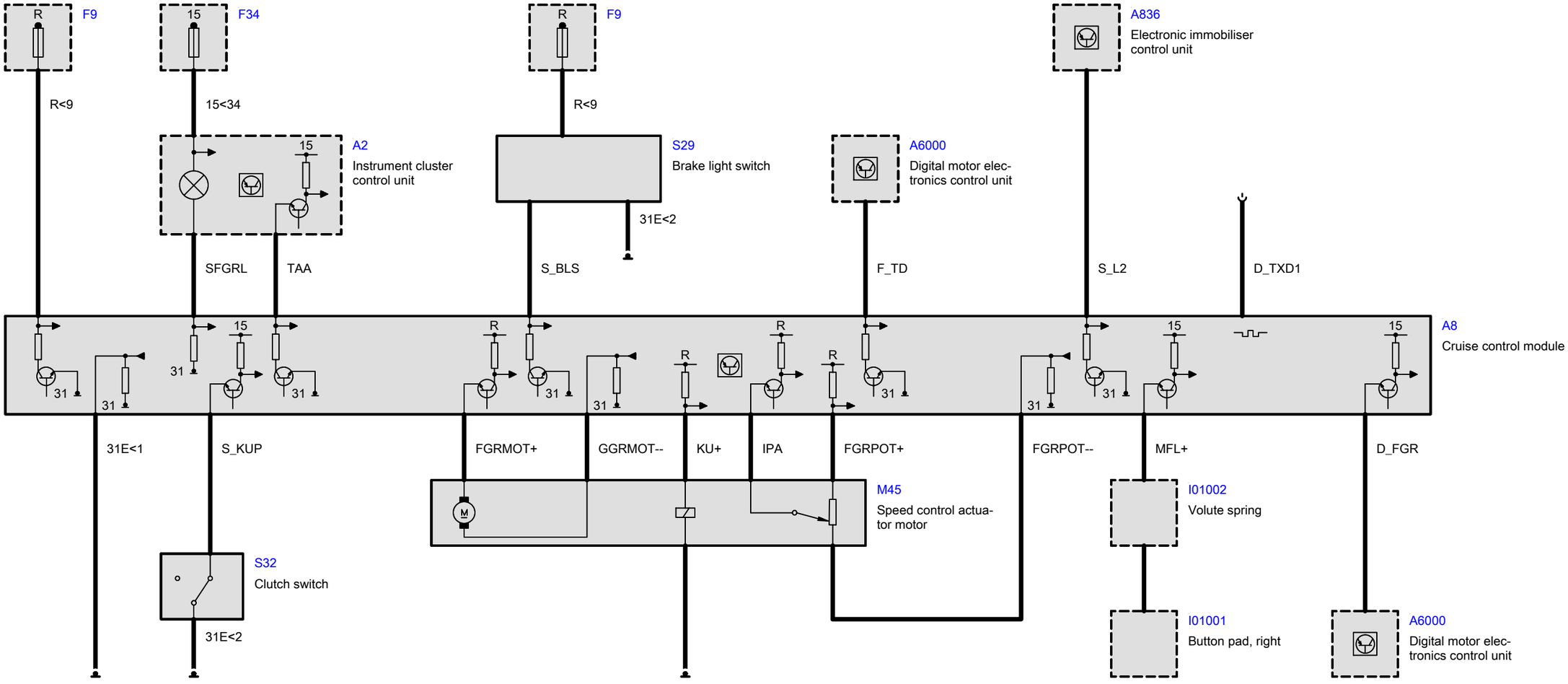
R
F9
15
F34
R
F9
A836
Electronic immobiliser control unit
R<9
15<34
R<9
A2
Instrument cluster control unit
S29
Brake light switch
A6000
Digital motor electronics control unit
31E<2
SFGRL
TAA
S_BLS
F_TD
S_L2
D_TXD1
A8
Cruise control module
31
15
R
31E<1
S_KUP
FGRMOT+
GGRMOT--
KU+
IPA
FGRPOT+
FGRPOT--
MFL+
D_FGR
M45
Speed control actuator motor
I01002
Volute spring
S32
Clutch switch
31E<2
I01001
Button pad, right
A6000
Digital motor electronics control unit