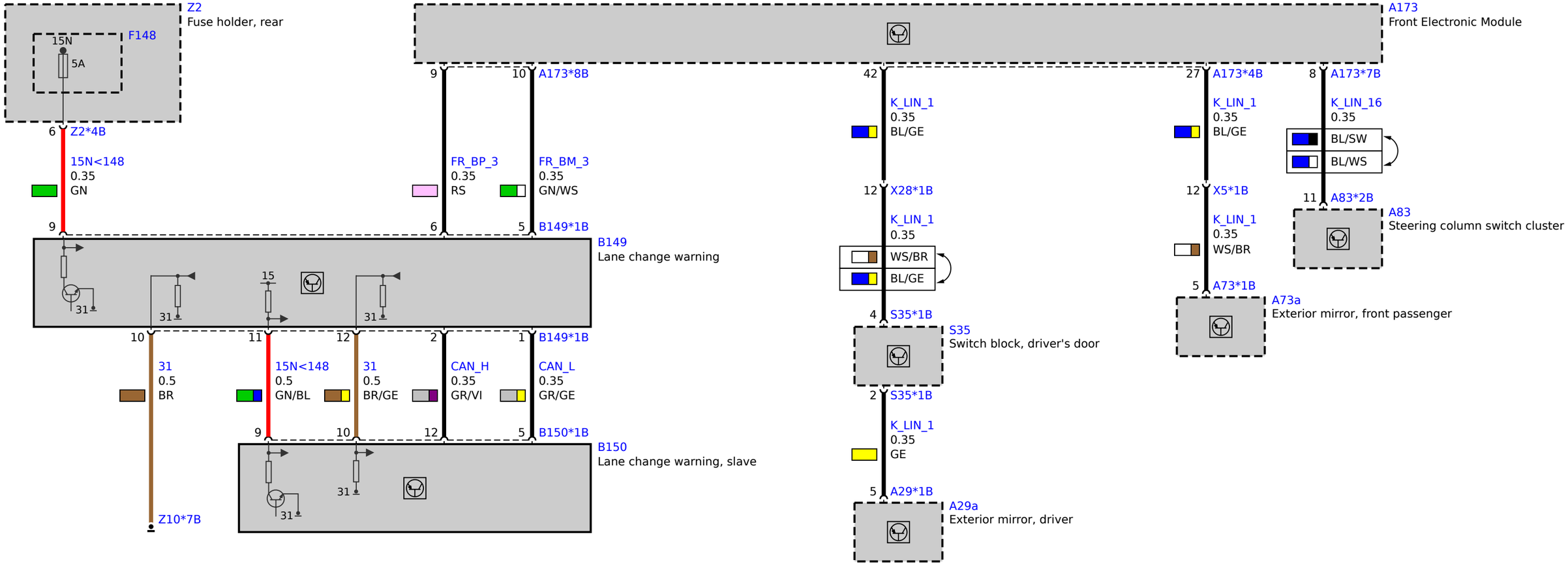
Z2
Fuse holder, rear
F148
15N
5A
6
Z2*4B
15N<148
0.35
GN
9
A173
Front Electronic Module
9
10
A173*8B
FR_BP_3
0.35
RS
FR_BM_3
0.35
GN/WS
6
5
B149*1B
B149
Lane change warning
31
15
31
31
10
11
12
2
1
B149*1B
31
0.5
BR
15N<148
0.5
GN/BL
31
0.5
BR/GE
CAN_H
0.35
GR/VI
CAN_L
0.35
GR/GE
9
10
12
5
B150*1B
B150
Lane change warning, slave
31
31
Z10*7B
42
K_LIN_1
0.35
BL/GE
12
X28*1B
K_LIN_1
0.35
WS/BR
BL/GE
4
S35*1B
S35
Switch block, driver's door
2
S35*1B
K_LIN_1
0.35
GE
5
A29*1B
A29a
Exterior mirror, driver
27
A173*4B
K_LIN_1
0.35
BL/GE
12
X5*1B
K_LIN_1
0.35
WS/BR
5
A73*1B
A73a
Exterior mirror, front passenger
8
A173*7B
K_LIN_16
0.35
BL/SW
BL/WS
11
A83*2B
A83
Steering column switch cluster