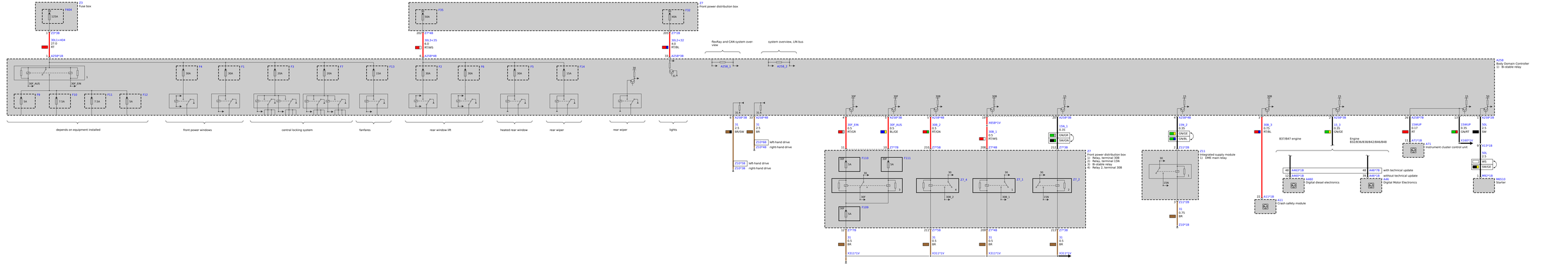
Z3
Fuse box
F404
125A
Z7
Front power distribution box
F35
50A
F32
40A
flexRay and CAN system overview
system overview, LIN bus
A258_1
A258_2
A258
Body Domain Controller
11 Bi-stable relay
depends on equipment installed
front power windows
central locking system
fanfares
rear window lift
heated rear window
rear wiper
rear wiper
lights
left-hand drive
right-hand drive
Front power distribution box
11 Relay, terminal 30B
21 Relay, terminal 15N
31 Bi-stable relay
41 Relay 2, terminal 30B
Integrated supply module
11 DME main relay
B37/B47 engine
Engine
B32/B36/B38/B42/B46/B48
with technical update
without technical update
A460
Digital Diesel electronics
A468
Digital Motor Electronics
A11
Crash safety module
A71
Instrument cluster control unit
M8510
Starter