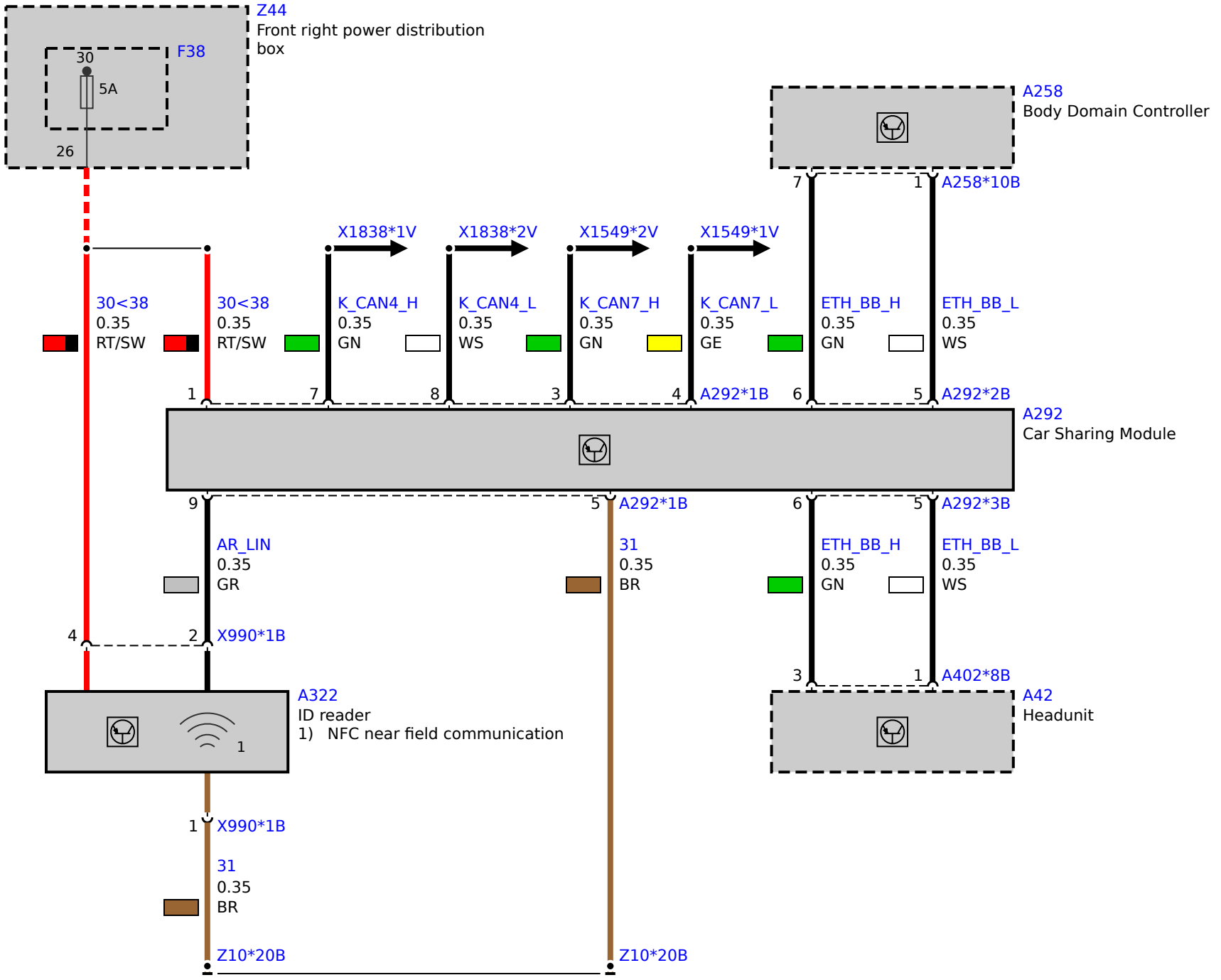
Z44
Front right power distribution box
F38
30
5A
26
A258
Body Domain Controller
7
1
A258*10B
X1838*1V
X1838*2V
X1549*2V
X1549*1V
30<38
0.35
RT/SW
30<38
0.35
RT/SW
K_CAN4_H
0.35
GN
K_CAN4_L
0.35
WS
K_CAN7_H
0.35
GN
K_CAN7_L
0.35
GE
ETH_BB_H
0.35
GN
ETH_BB_L
0.35
WS
1
7
8
3
4
A292*1B
6
5
A292*2B
A292
Car Sharing Module
9
5
A292*1B
6
5
A292*3B
AR_LIN
0.35
GR
31
0.35
BR
ETH_BB_H
0.35
GN
ETH_BB_L
0.35
WS
4
2
X990*1B
3
1
A402*8B
A322
ID reader
1) NFC near field communication
1
A42
Headunit
1
X990*1B
31
0.35
BR
Z10*20B
Z10*20B