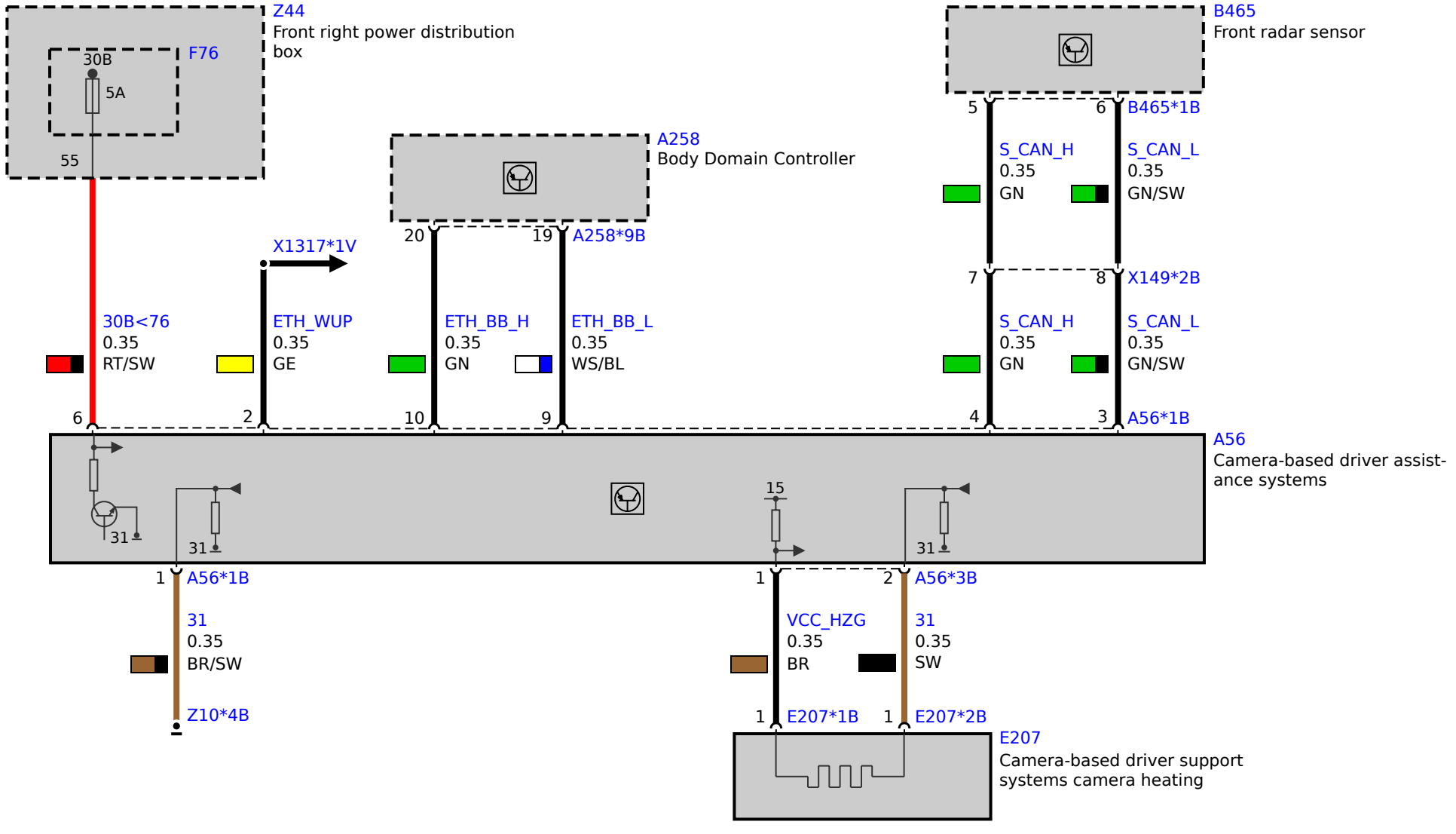
Z44
Front right power distribution box
F76
30B
5A
55
A258
Body Domain Controller
B465
Front radar sensor
5
6
B465*1B
S_CAN_H
0.35
GN
S_CAN_L
0.35
GN/SW
20
19
A258*9B
X1317*1V
7
8
X149*2B
30B<76
0.35
RT/SW
ETH_WUP
0.35
GE
ETH_BB_H
0.35
GN
ETH_BB_L
0.35
WS/BL
S_CAN_H
0.35
GN
S_CAN_L
0.35
GN/SW
6
2
10
9
4
3
A56*1B
A56
Camera-based driver assistance systems
31
31
15
31
1
A56*1B
1
2
A56*3B
31
0.35
BR/SW
VCC_HZG
0.35
BR
31
0.35
SW
Z10*4B
1
E207*1B
1
E207*2B
E207
Camera-based driver support systems camera heating