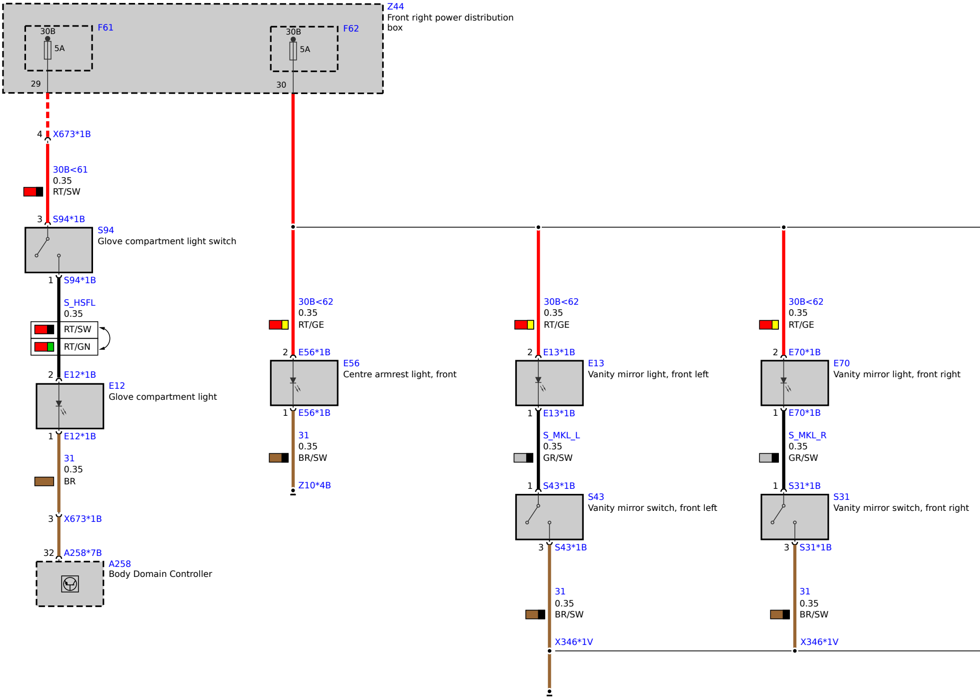
Z44
Front right power distribution box
F61
30B
5A
29
F62
30B
5A
30
4 X673*1B
30B<61
0.35
RT/SW
3 S94*1B
S94
Glove compartment light switch
1 S94*1B
S_HSFL
0.35
RT/SW
RT/GN
2 E12*1B
E12
Glove compartment light
1 E12*1B
31
0.35
BR
3 X673*1B
32 A258*7B
A258
Body Domain Controller
30B<62
0.35
RT/GE
2 E56*1B
E56
Centre armrest light, front
1 E56*1B
31
0.35
BR/SW
Z10*4B
30B<62
0.35
RT/GE
2 E13*1B
E13
Vanity mirror light, front left
1 E13*1B
S_MKL_L
0.35
GR/SW
1 S43*1B
S43
Vanity mirror switch, front left
3 S43*1B
31
0.35
BR/SW
X346*1V
30B<62
0.35
RT/GE
2 E70*1B
E70
Vanity mirror light, front right
1 E70*1B
S_MKL_R
0.35
GR/SW
1 S31*1B
S31
Vanity mirror switch, front right
3 S31*1B
31
0.35
BR/SW
X346*1V

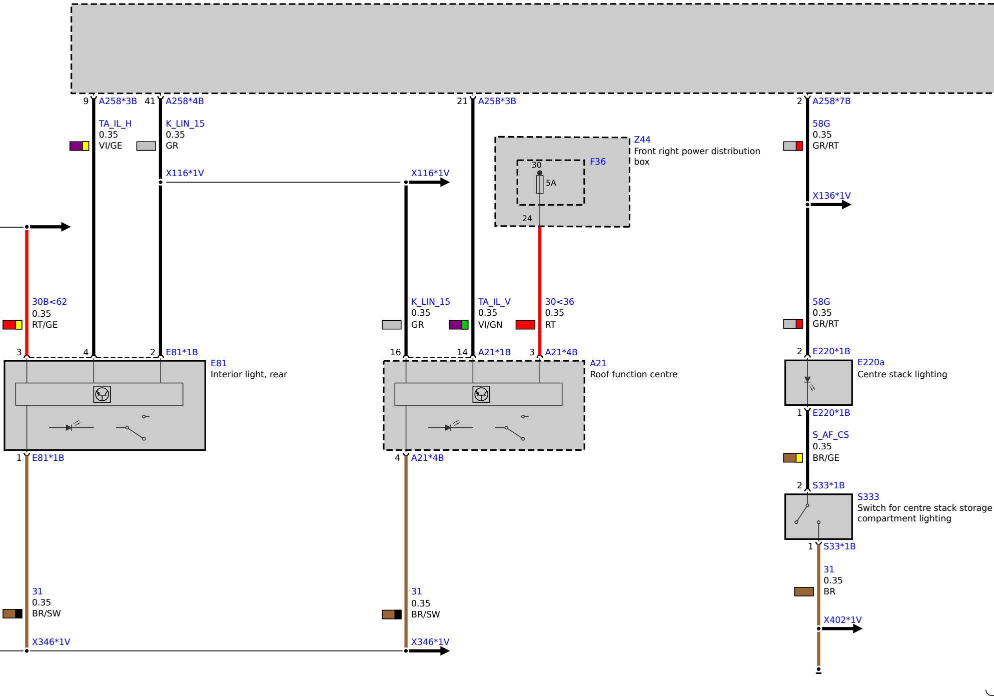
9 A258*3B
41 A258*4B
21 A258*3B
2 A258*7B
TA_IL_H
0.35
VI/GE
K_LIN_15
0.35
GR
X116*1V
X116*1V
Z44
Front right power distribution box
F36
30
5A
24
58G
0.35
GR/RT
X136*1V
30B<62
0.35
RT/GE
K_LIN_15
0.35
GR
TA_IL_V
0.35
VI/GN
30<36
0.35
RT
58G
0.35
GR/RT
3
4
2 E81*1B
E81
Interior light, rear
16
14 A21*1B
3 A21*4B
A21
Roof function centre
2 E220*1B
E220a
Centre stack lighting
1 E220*1B
S_AF_CS
0.35
BR/GE
2 S33*1B
S333
Switch for centre stack storage compartment lighting
1 S33*1B
1 E81*1B
4 A21*4B
31
0.35
BR
X402*1V
31
0.35
BR/SW
31
0.35
BR/SW
X346*1V
X346*1V

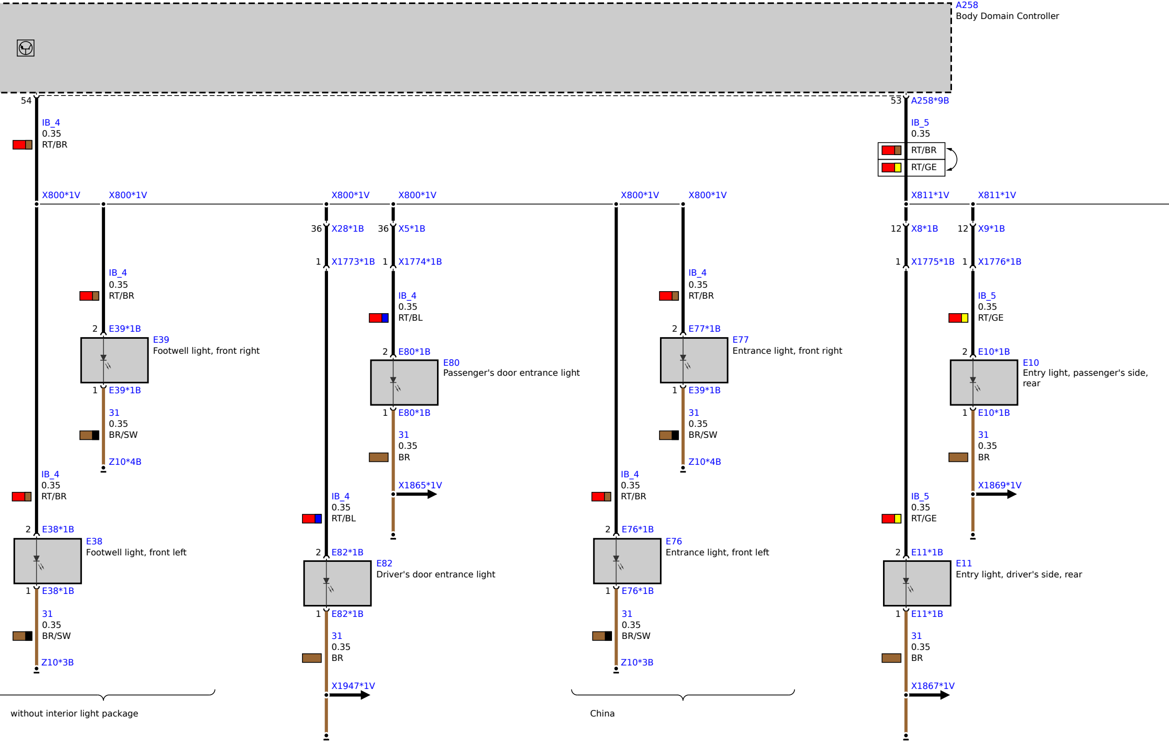
A258
Body Domain Controller
54
IB_4
0.35
RT/BR
53
A258*9B
IB_5
0.35
RT/BR
RT/GE
X800*1V
X800*1V
X800*1V
X800*1V
X800*1V
X800*1V
X811*1V
X811*1V
36
X28*1B
36
X5*1B
12
X8*1B
12
X9*1B
1
X1773*1B
1
X1774*1B
1
X1775*1B
1
X1776*1B
IB_4
0.35
RT/BR
2
E39*1B
E39
Footwell light, front right
1
E39*1B
31
0.35
BR/SW
Z10*4B
IB_4
0.35
RT/BL
2
E80*1B
E80
Passenger's door entrance light
1
E80*1B
31
0.35
BR
X1865*1V
IB_4
0.35
RT/BR
2
E77*1B
E77
Entrance light, front right
1
E39*1B
31
0.35
BR/SW
Z10*4B
IB_5
0.35
RT/GE
2
E10*1B
E10
Entry light, passenger's side, rear
1
E10*1B
31
0.35
BR
X1869*1V
IB_4
0.35
RT/BR
2
E38*1B
E38
Footwell light, front left
1
E38*1B
31
0.35
BR/SW
Z10*3B
IB_4
0.35
RT/BL
2
E82*1B
E82
Driver's door entrance light
1
E82*1B
31
0.35
BR
X1947*1V
IB_4
0.35
RT/BR
2
E76*1B
E76
Entrance light, front left
1
E76*1B
31
0.35
BR/SW
Z10*3B
IB_5
0.35
RT/GE
2
E11*1B
E11
Entry light, driver's side, rear
1
E11*1B
31
0.35
BR
X1867*1V
without interior light package
China

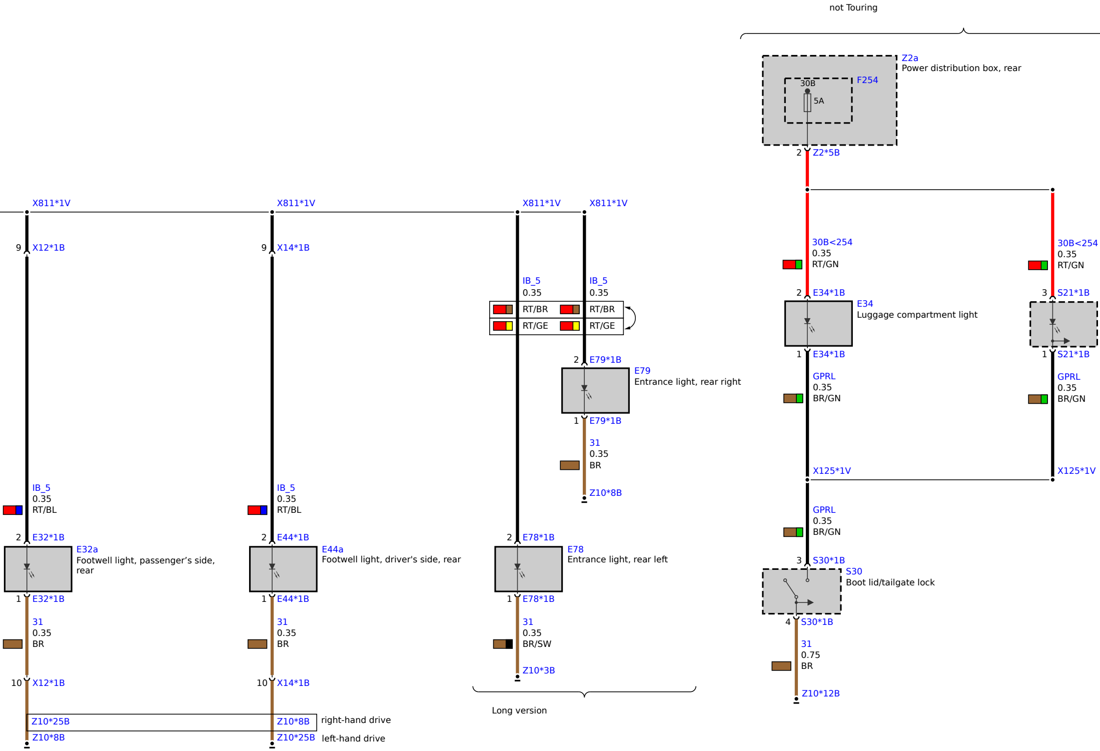
not Touring
Z2a
Power distribution box, rear
F254
30B
5A
2 Z2*5B
30B<254
0.35
RT/GN
2 E34*1B
E34
Luggage compartment light
1 E34*1B
GPRL
0.35
BR/GN
X125*1V
GPRL
0.35
BR/GN
3 S30*1B
S30
Boot lid/tailgate lock
4 S30*1B
31
0.75
BR
Z10*12B
30B<254
0.35
RT/GN
3 S21*1B
1 S21*1B
GPRL
0.35
BR/GN
X125*1V
X811*1V
X811*1V
X811*1V
X811*1V
9 X12*1B
9 X14*1B
IB_5
0.35
RT/BL
2 E32*1B
E32a
Footwell light, passenger's side, rear
1 E32*1B
31
0.35
BR
10 X12*1B
IB_5
0.35
RT/BL
2 E44*1B
E44a
Footwell light, driver's side, rear
1 E44*1B
31
0.35
BR
10 X14*1B
Z10*25B
Z10*8B
right-hand drive
Z10*8B
Z10*25B
left-hand drive
IB_5
0.35
IB_5
0.35
RT/BR
RT/BR
RT/GE
RT/GE
2 E79*1B
E79
Entrance light, rear right
1 E79*1B
31
0.35
BR
Z10*8B
2 E78*1B
E78
Entrance light, rear left
1 E78*1B
31
0.35
BR/SW
Z10*3B
Long version

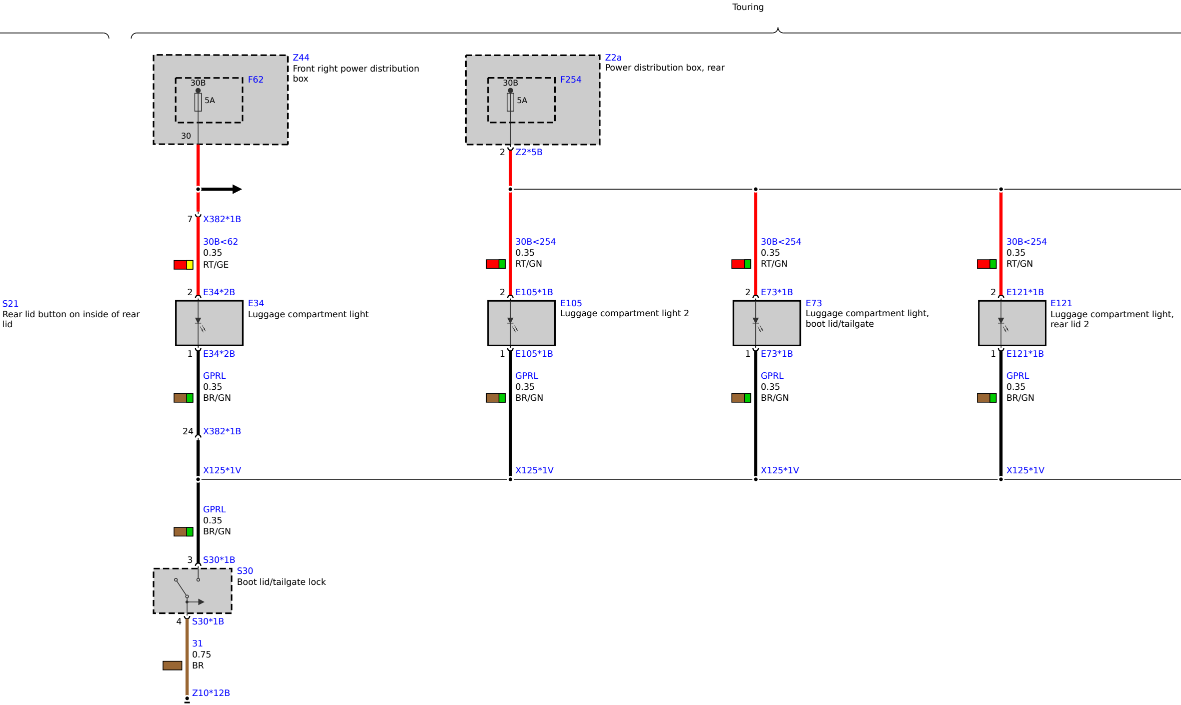
Touring
Z44
Front right power distribution box
F62
30B
5A
30
Z2a
Power distribution box, rear
F254
30B
5A
2
Z2*5B
7
X382*1B
30B<62
0.35
RT/GE
30B<254
0.35
RT/GN
30B<254
0.35
RT/GN
30B<254
0.35
RT/GN
2
E34*2B
2
E105*1B
2
E73*1B
2
E121*1B
S21
Rear lid button on inside of rear lid
E34
Luggage compartment light
E105
Luggage compartment light 2
E73
Luggage compartment light, boot lid/tailgate
E121
Luggage compartment light, rear lid 2
1
E34*2B
1
E105*1B
1
E73*1B
1
E121*1B
GPRL
0.35
BR/GN
GPRL
0.35
BR/GN
GPRL
0.35
BR/GN
GPRL
0.35
BR/GN
24
X382*1B
X125*1V
X125*1V
X125*1V
X125*1V
GPRL
0.35
BR/GN
3
S30*1B
S30
Boot lid/tailgate lock
4
S30*1B
31
0.75
BR
Z10*12B

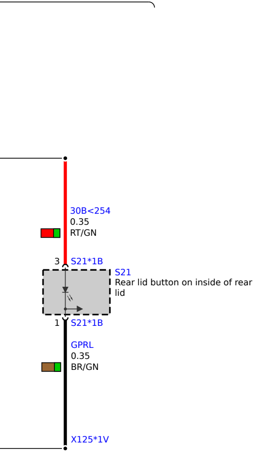
30B<254
0.35
RT/GN
3
S21*1B
S21
Rear lid button on inside of rear lid
1
S21*1B
GPRL
0.35
BR/GN
X125*1V