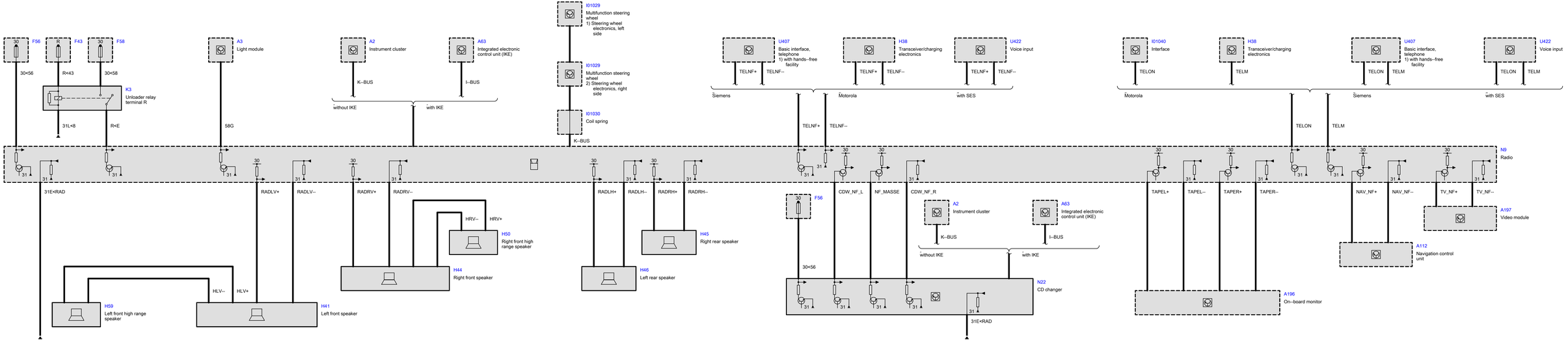
F56
F43
F58
30<56
R<43
30<58
K3
Unloader relay terminal R
31L<8
R<E
A3
Light module
58G
A2
Instrument cluster
K--BUS
without IKE
A63
Integrated electronic control unit (IKE)
I--BUS
with IKE
I01029
Multifunction steering wheel
1) Steering wheel electronics, left side
I01029
Multifunction steering wheel
2) Steering wheel electronics, right side
I01030
Coil spring
K--BUS
U407
Basic interface, telephone
1) with hands--free facility
TELNF+
TELNF--
Siemens
H38
Transceiver/charging electronics
TELNF+
TELNF--
Motorola
U422
Voice input
TELNF+
TELNF--
with SES
I01040
Interface
TELON
Motorola
H38
Transceiver/charging electronics
TELM
U407
Basic interface, telephone
1) with hands--free facility
TELON
TELM
Siemens
U422
Voice input
TELON
TELM
with SES
N9
Radio
31E<RAD
RADLV+
RADLV--
RADRV+
RADRV--
HRV--
HRV+
H50
Right front high range speaker
H44
Right front speaker
RADLH+
RADLH--
RADRH+
RADRH--
H45
Right rear speaker
H46
Left rear speaker
HLV--
HLV+
H59
Left front high range speaker
H41
Left front speaker
TELNF+
TELNF--
CDW_NF_L
NF_MASSE
CDW_NF_R
F56
30<56
A2
Instrument cluster
K--BUS
without IKE
A63
Integrated electronic control unit (IKE)
I--BUS
with IKE
N22
CD changer
31E<RAD
TELON
TELM
TAPEL+
TAPEL--
TAPER+
TAPER--
A196
On--board monitor
NAV_NF+
NAV_NF--
A112
Navigation control unit
TV_NF+
TV_NF--
A197
Video module