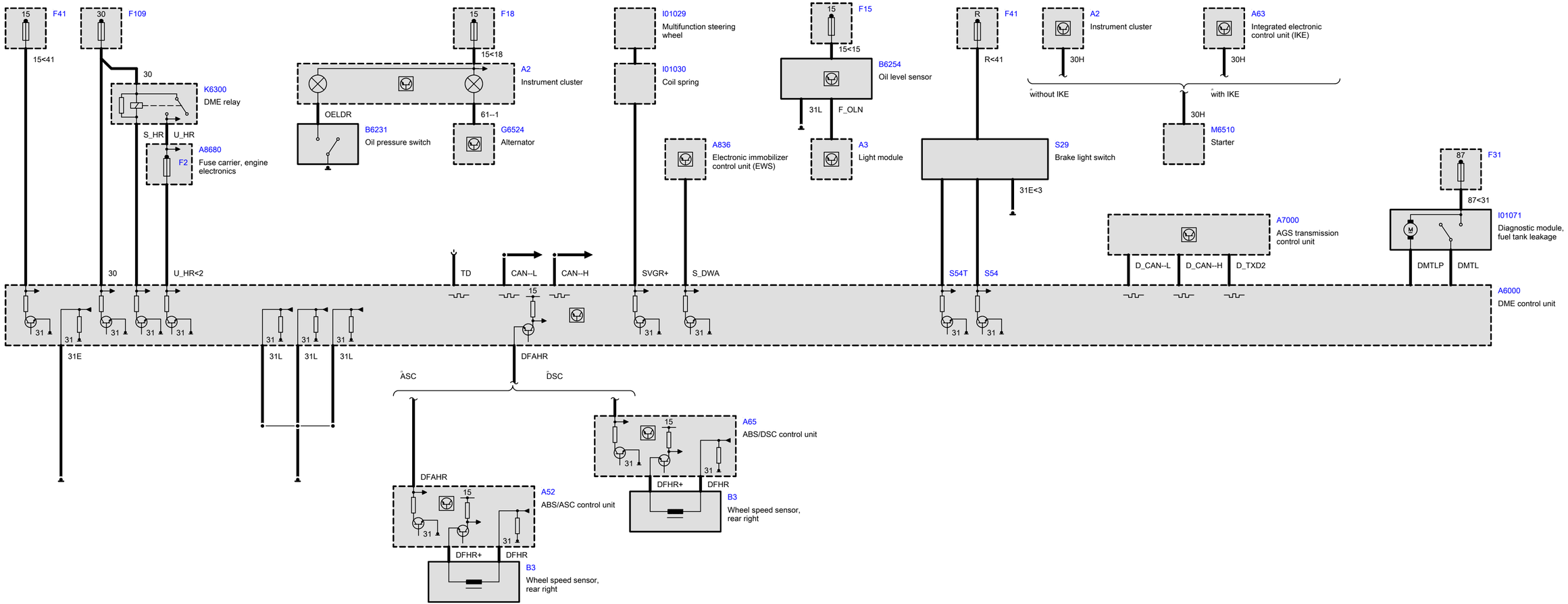
15
F41
15<41
30
F109
30
K6300
DME relay
S_HR
U_HR
A8680
F2
Fuse carrier, engine electronics
15
F18
15<18
A2
Instrument cluster
OELDR
B6231
Oil pressure switch
61--1
G6524
Alternator
I01029
Multifunction steering wheel
I01030
Coil spring
A836
Electronic immobilizer control unit (EWS)
15
F15
15<15
B6254
Oil level sensor
31L
F_OLN
A3
Light module
R
F41
R<41
S29
Brake light switch
31E<3
A2
Instrument cluster
30H
without IKE
A63
Integrated electronic control unit (IKE)
30H
with IKE
30H
M6510
Starter
87
F31
87<31
I01071
Diagnostic module, fuel tank leakage
M
DMTLP
DMTL
A7000
AGS transmission control unit
D_CAN--L
D_CAN--H
D_TXD2
30
U_HR<2
TD
CAN--L
CAN--H
SVGR+
S_DWA
S54T
S54
A6000
DME control unit
31
31E
31L
31L
31L
15
DFAHR
ASC
DSC
A65
ABS/DSC control unit
DFHR+
DFHR
B3
Wheel speed sensor, rear right
DFAHR
A52
ABS/ASC control unit
DFHR+
DFHR
B3
Wheel speed sensor, rear right