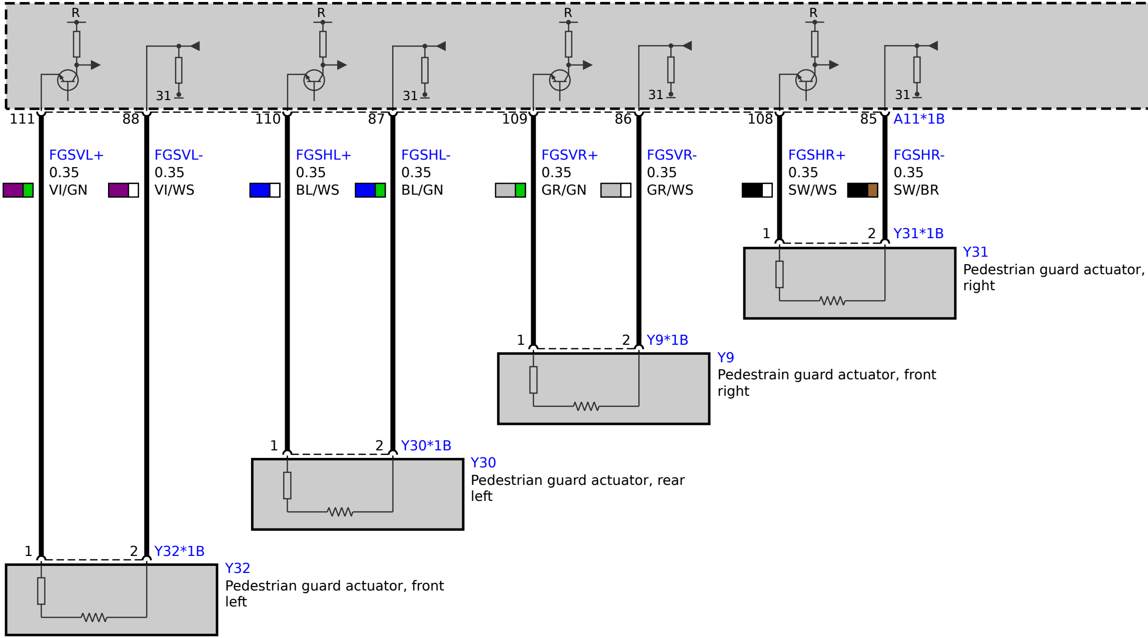
R
R
R
R
31
31
31
31
111
88
110
87
109
86
108
85
A11*1B
FGSVL+
0.35
VI/GN
FGSVL-
0.35
VI/WS
FGSHL+
0.35
BL/WS
FGSHL-
0.35
BL/GN
FGSVR+
0.35
GR/GN
FGSVR-
0.35
GR/WS
FGSHR+
0.35
SW/WS
FGSHR-
0.35
SW/BR
1
2
Y31*1B
Y31
Pedestrian guard actuator, right
1
2
Y9*1B
Y9
Pedestrain guard actuator, front right
1
2
Y30*1B
Y30
Pedestrian guard actuator, rear left
1
2
Y32*1B
Y32
Pedestrian guard actuator, front left

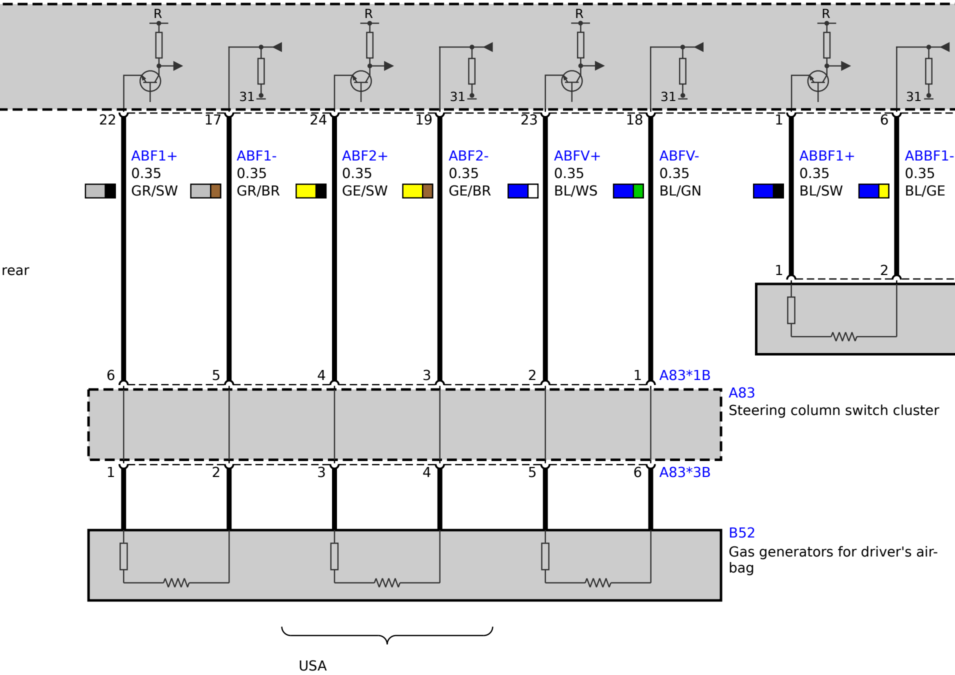
R
R
R
R
31
31
31
31
22
17
24
19
23
18
1
6
ABF1+
0.35
GR/SW
ABF1-
0.35
GR/BR
ABF2+
0.35
GE/SW
ABF2-
0.35
GE/BR
ABFV+
0.35
BL/WS
ABFV-
0.35
BL/GN
ABBF1+
0.35
BL/SW
ABBF1-
0.35
BL/GE
rear
1
2
6
5
4
3
2
1
A83*1B
A83
Steering column switch cluster
1
2
3
4
5
6
A83*3B
B52
Gas generators for driver's air-bag
USA

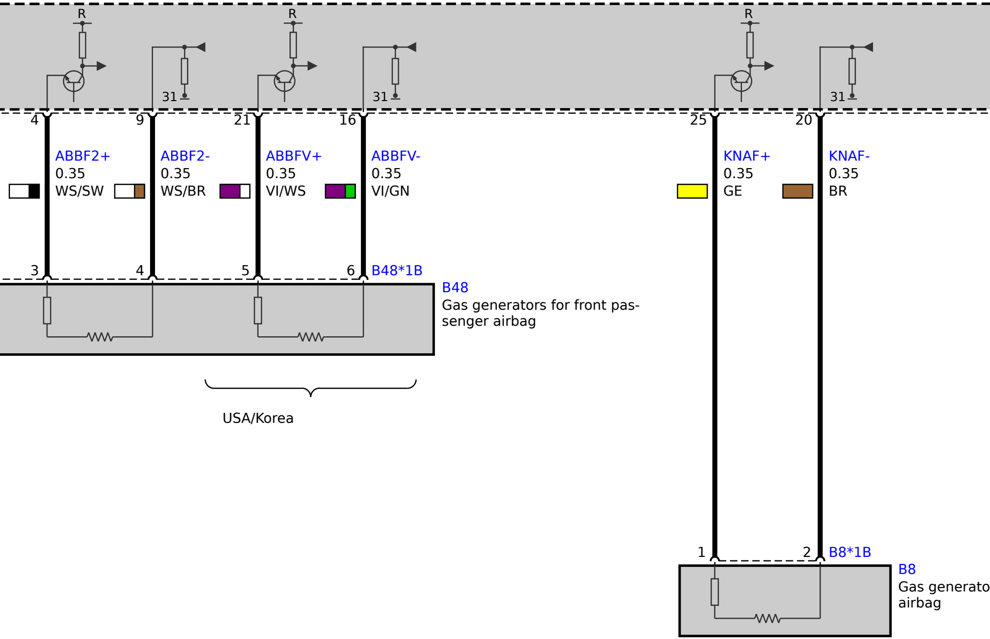
R
R
R
31
31
31
4
9
21
16
25
20
ABBF2+
0.35
WS/SW
ABBF2-
0.35
WS/BR
ABBFV+
0.35
VI/WS
ABBFV-
0.35
VI/GN
KNAF+
0.35
GE
KNAF-
0.35
BR
3
4
5
6
B48*1B
B48
Gas generators for front passenger airbag
USA/Korea
1
2
B8*1B
B8
Gas generato
airbag

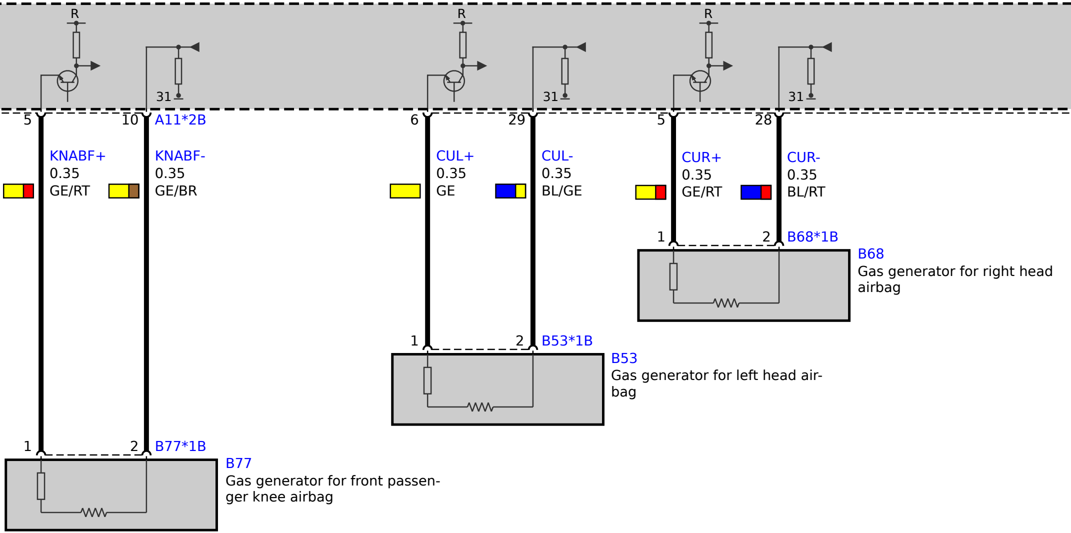
R
31
R
31
R
31
5
10
A11*2B
6
29
5
28
KNABF+
0.35
GE/RT
KNABF-
0.35
GE/BR
CUL+
0.35
GE
CUL-
0.35
BL/GE
CUR+
0.35
GE/RT
CUR-
0.35
BL/RT
1
2
B68*1B
B68
Gas generator for right head airbag
1
2
B53*1B
B53
Gas generator for left head air-bag
1
2
B77*1B
B77
Gas generator for front passen-ger knee airbag

r for driver knee

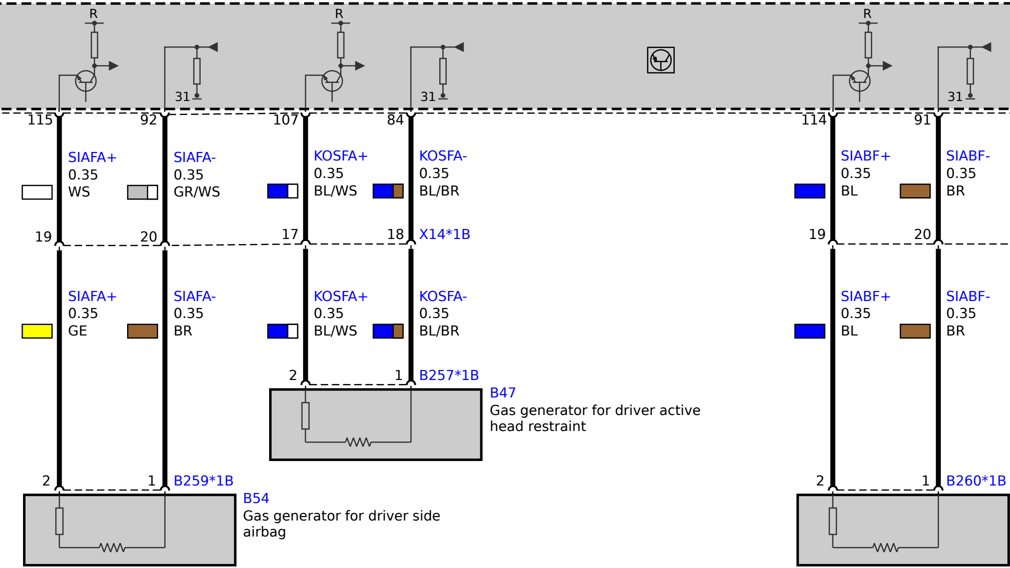
R
R
R
31
31
31
115
92
107
84
114
91
SIAFA+
0.35
WS
SIAFA-
0.35
GR/WS
KOSFA+
0.35
BL/WS
KOSFA-
0.35
BL/BR
SIABF+
0.35
BL
SIABF-
0.35
BR
19
20
17
18
X14*1B
19
20
SIAFA+
0.35
GE
SIAFA-
0.35
BR
KOSFA+
0.35
BL/WS
KOSFA-
0.35
BL/BR
SIABF+
0.35
BL
SIABF-
0.35
BR
2
1
B257*1B
B47
Gas generator for driver active head restraint
2
1
B259*1B
B54
Gas generator for driver side airbag
2
1
B260*1B

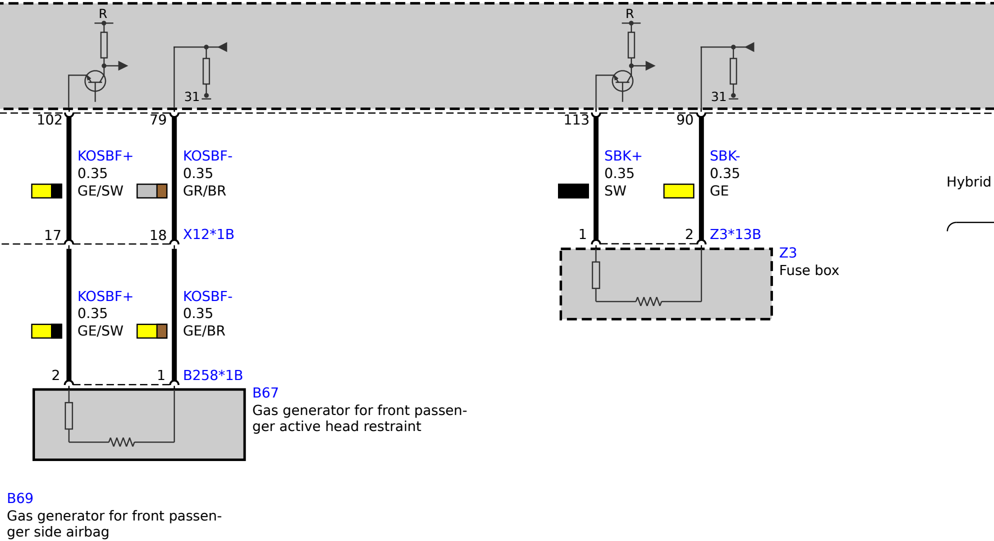
R
31
R
31
102
79
113
90
KOSBF+
0.35
GE/SW
KOSBF-
0.35
GR/BR
SBK+
0.35
SW
SBK-
0.35
GE
Hybrid
17
18
X12*1B
1
2
Z3*13B
Z3
Fuse box
KOSBF+
0.35
GE/SW
KOSBF-
0.35
GE/BR
2
1
B258*1B
B67
Gas generator for front passenger active head restraint
B69
Gas generator for front passenger side airbag

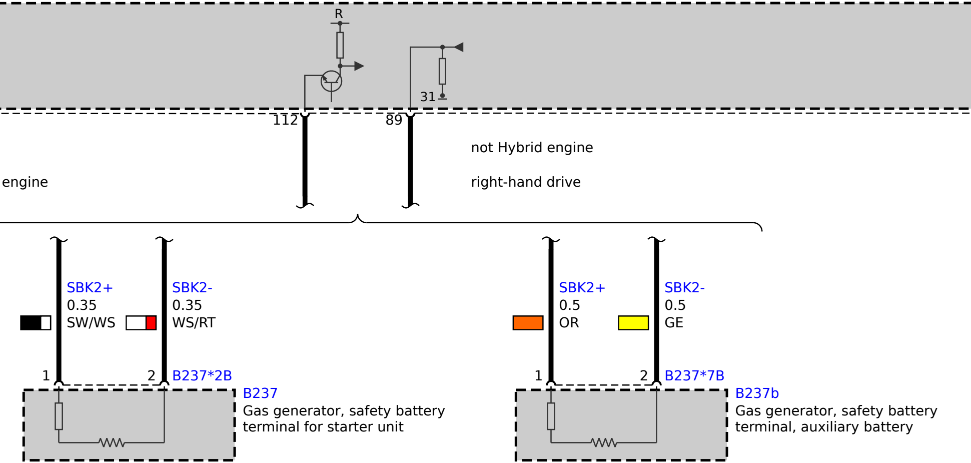
R
31
112
89
not Hybrid engine
engine
right-hand drive
SBK2+
0.35
SW/WS
SBK2-
0.35
WS/RT
1
2
B237*2B
B237
Gas generator, safety battery terminal for starter unit
SBK2+
0.5
OR
SBK2-
0.5
GE
1
2
B237*7B
B237b
Gas generator, safety battery terminal, auxiliary battery

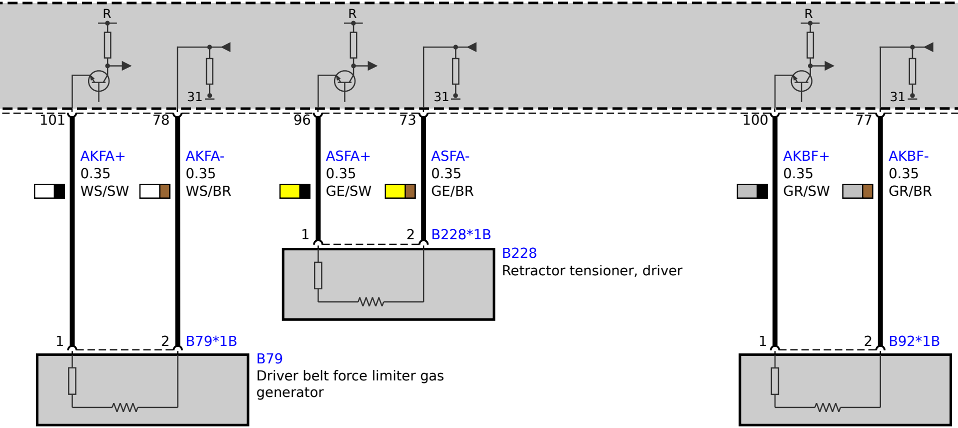
R
R
R
31
31
31
101
78
96
73
100
77
AKFA+
0.35
WS/SW
AKFA-
0.35
WS/BR
ASFA+
0.35
GE/SW
ASFA-
0.35
GE/BR
AKBF+
0.35
GR/SW
AKBF-
0.35
GR/BR
1
2
B228*1B
B228
Retractor tensioner, driver
1
2
B79*1B
B79
Driver belt force limiter gas generator
1
2
B92*1B

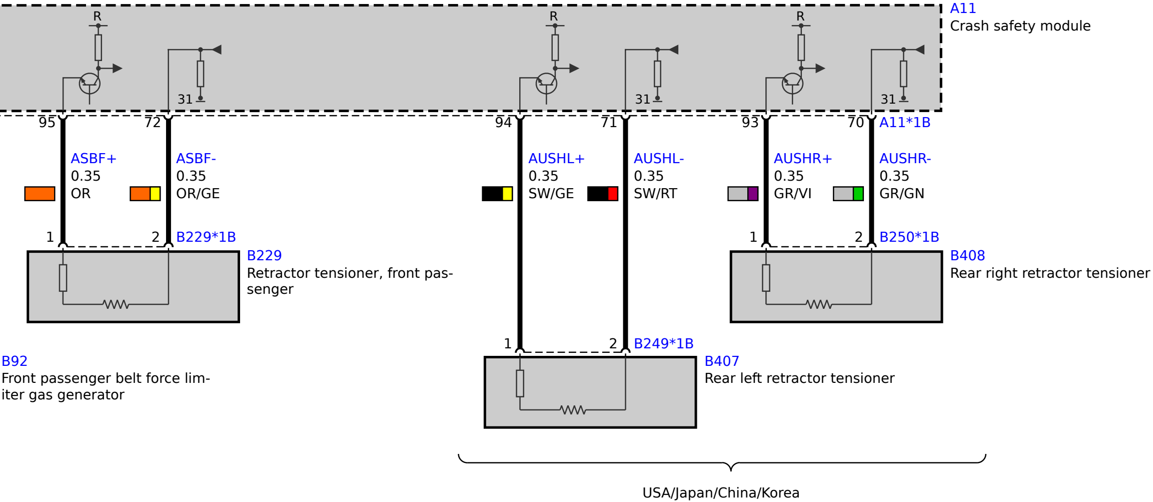
A11
Crash safety module
R
R
R
31
31
31
95
72
94
71
93
70
A11*1B
ASBF+
0.35
OR
ASBF-
0.35
OR/GE
AUSHL+
0.35
SW/GE
AUSHL-
0.35
SW/RT
AUSHR+
0.35
GR/VI
AUSHR-
0.35
GR/GN
1
2
B229*1B
B229
Retractor tensioner, front passenger
1
2
B250*1B
B408
Rear right retractor tensioner
1
2
B249*1B
B407
Rear left retractor tensioner
B92
Front passenger belt force limiter gas generator
USA/Japan/China/Korea