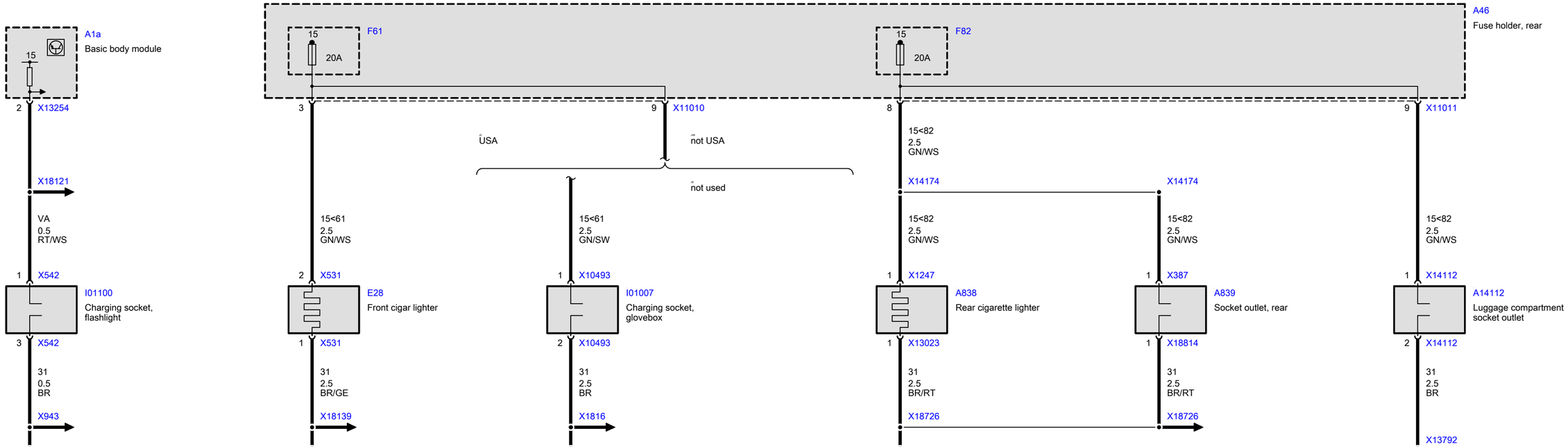
A46
Fuse holder, rear
A1a
Basic body module
15
F61
20A
F82
X13254
X11010
X11011
USA
not USA
not used
15<82
2.5
GN/WS
X18121
VA
0.5
RT/WS
15<61
2.5
GN/WS
15<61
2.5
GN/SW
X14174
X542
X531
X10493
X1247
X387
X14112
I01100
Charging socket, flashlight
E28
Front cigar lighter
I01007
Charging socket, glovebox
A838
Rear cigarette lighter
A839
Socket outlet, rear
A14112
Luggage compartment socket outlet
X13023
X18814
31
0.5
BR
31
2.5
BR/GE
31
2.5
BR
31
2.5
BR/RT
31
2.5
BR
X943
X18139
X1816
X18726
X13792