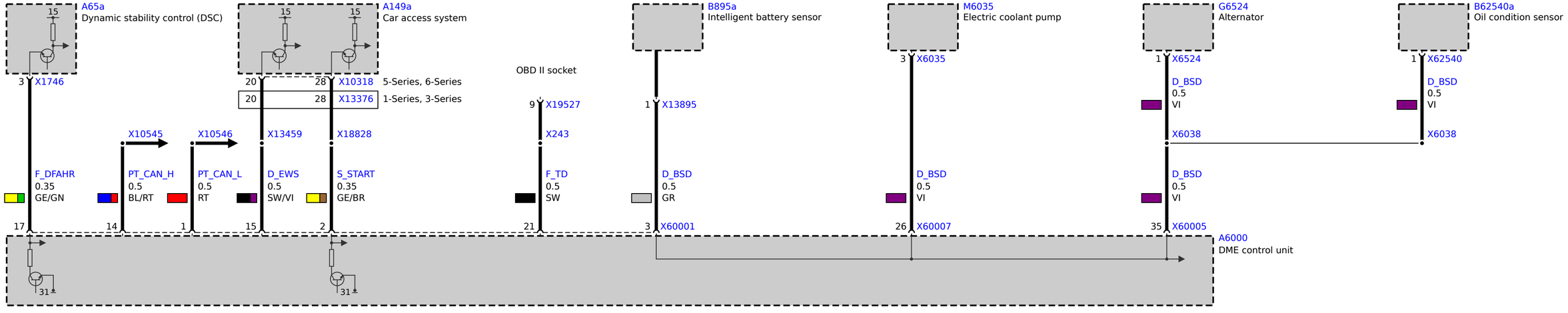
A65a
Dynamic stability control (DSC)
A149a
Car access system
B895a
Intelligent battery sensor
M6035
Electric coolant pump
G6524
Alternator
B62540a
Oil condition sensor
OBD II socket
X1746
X10318
5-Series, 6-Series
X13376
1-Series, 3-Series
X19527
X13895
X6035
X6524
X62540
X10545
X10546
X13459
X18828
X243
X6038
X6038
F_DFAHR
0.35
GE/GN
PT_CAN_H
0.5
BL/RT
PT_CAN_L
0.5
RT
D_EWS
0.5
SW/VI
S_START
0.35
GE/BR
F_TD
0.5
SW
D_BSD
0.5
GR
D_BSD
0.5
VI
D_BSD
0.5
VI
D_BSD
0.5
VI
D_BSD
0.5
VI
X60001
X60007
X60005
A6000
DME control unit