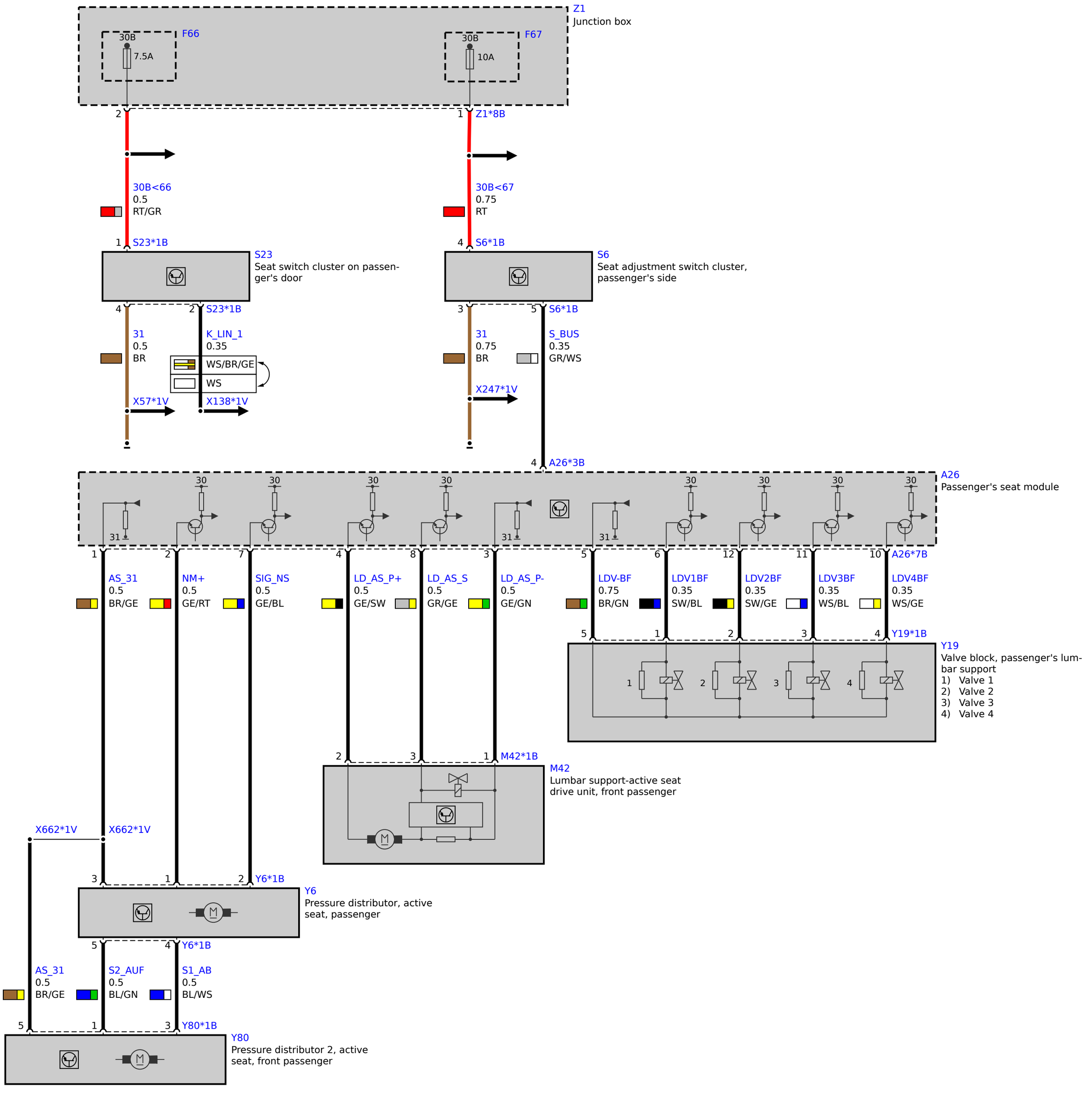
Z1
Junction box
F66
30B
7.5A
F67
30B
10A
2
1
Z1*8B
30B<66
0.5
RT/GR
30B<67
0.75
RT
1
S23*1B
4
S6*1B
S23
Seat switch cluster on passen-
ger's door
S6
Seat adjustment switch cluster,
passenger's side
4
2
S23*1B
3
5
S6*1B
31
0.5
BR
K_LIN_1
0.35
WS/BR/GE
WS
31
0.75
BR
S_BUS
0.35
GR/WS
X57*1V
X138*1V
X247*1V
4
A26*3B
A26
Passenger's seat module
30
31
1
2
7
4
8
3
5
6
12
11
10
A26*7B
AS_31
0.5
BR/GE
NM+
0.5
GE/RT
SIG_NS
0.5
GE/BL
LD_AS_P+
0.5
GE/SW
LD_AS_S
0.5
GR/GE
LD_AS_P-
0.5
GE/GN
LDV-BF
0.75
BR/GN
LDV1BF
0.35
SW/BL
LDV2BF
0.35
SW/GE
LDV3BF
0.35
WS/BL
LDV4BF
0.35
WS/GE
5
1
2
3
4
Y19*1B
Y19
Valve block, passenger's lum-
bar support
1) Valve 1
2) Valve 2
3) Valve 3
4) Valve 4
2
3
1
M42*1B
M42
Lumbar support-active seat
drive unit, front passenger
X662*1V
X662*1V
3
1
2
Y6*1B
Y6
Pressure distributor, active
seat, passenger
5
4
Y6*1B
AS_31
0.5
BR/GE
S2_AUF
0.5
BL/GN
S1_AB
0.5
BL/WS
5
1
3
Y80*1B
Y80
Pressure distributor 2, active
seat, front passenger