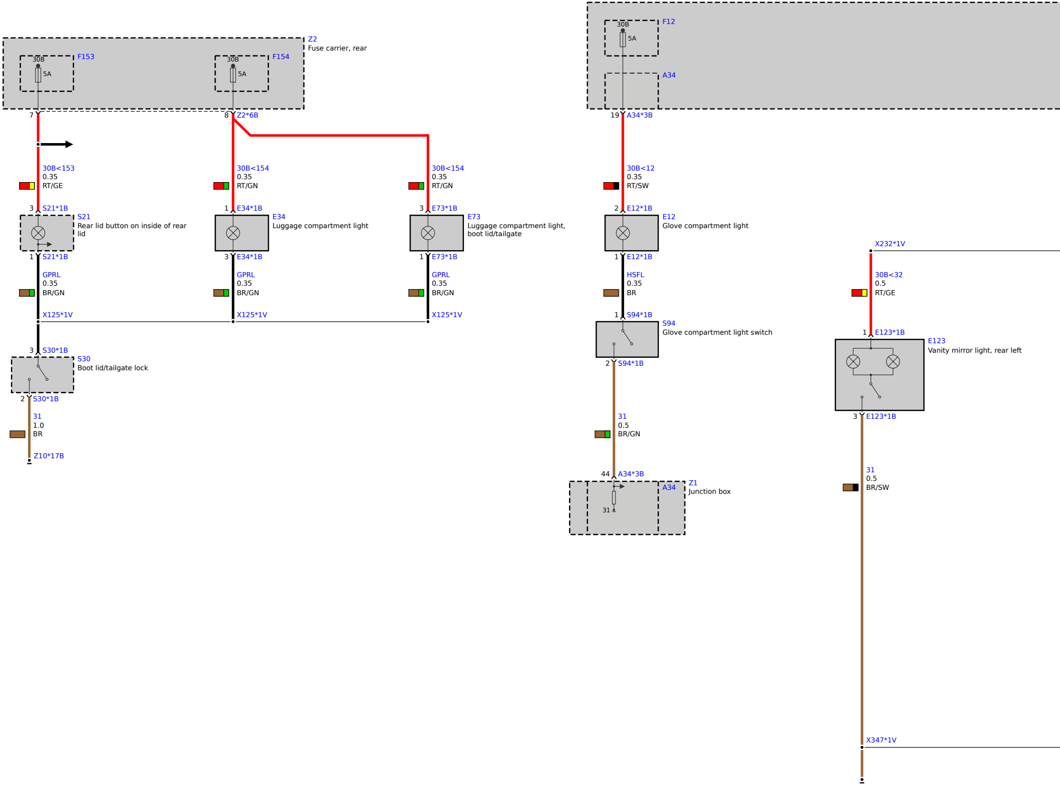
Z2
Fuse carrier, rear
F153
30B
5A
F154
30B
5A
7
8
Z2*6B
30B<153
0.35
RT/GE
30B<154
0.35
RT/GN
30B<154
0.35
RT/GN
3
S21*1B
S21
Rear lid button on inside of rear lid
1
S21*1B
1
E34*1B
E34
Luggage compartment light
3
E34*1B
3
E73*1B
E73
Luggage compartment light, boot lid/tailgate
1
E73*1B
GPRL
0.35
BR/GN
GPRL
0.35
BR/GN
GPRL
0.35
BR/GN
X125*1V
X125*1V
X125*1V
3
S30*1B
S30
Boot lid/tailgate lock
2
S30*1B
31
1.0
BR
Z10*17B
F12
30B
5A
A34
19
A34*3B
30B<12
0.35
RT/SW
2
E12*1B
E12
Glove compartment light
1
E12*1B
HSFL
0.35
BR
1
S94*1B
S94
Glove compartment light switch
2
S94*1B
31
0.5
BR/GN
44
A34*3B
A34
Z1
Junction box
31
X232*1V
30B<32
0.5
RT/GE
1
E123*1B
E123
Vanity mirror light, rear left
3
E123*1B
31
0.5
BR/SW
X347*1V

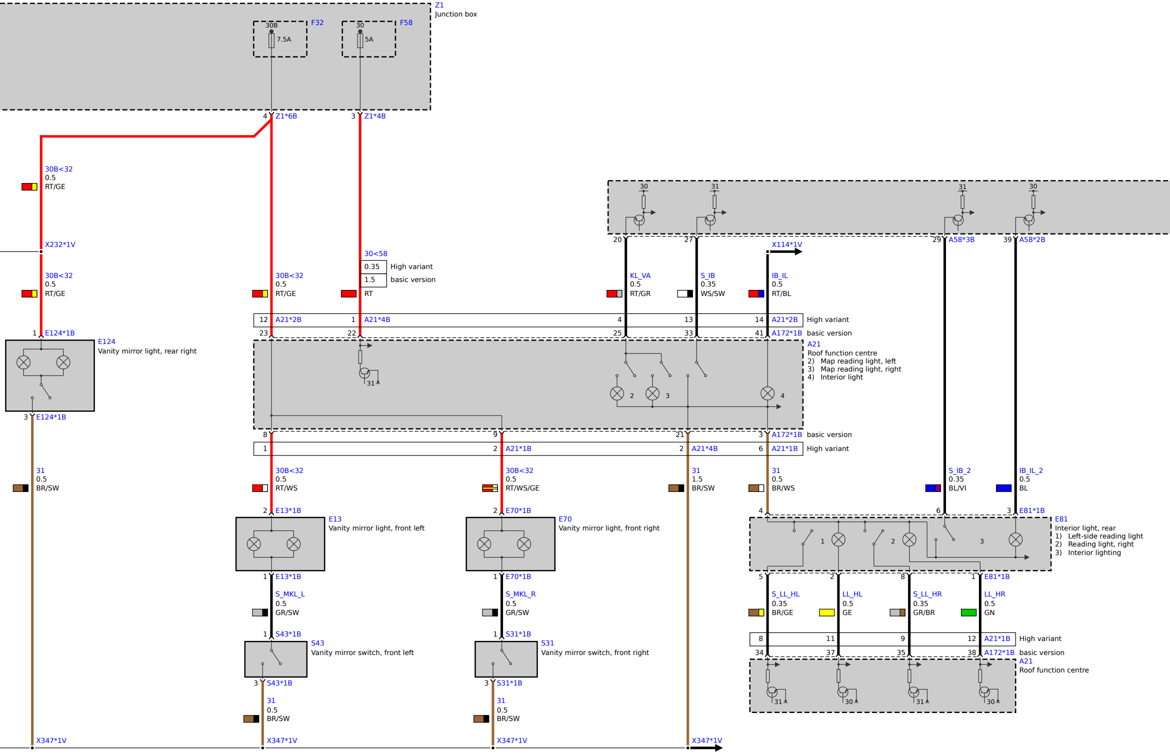
Z1
Junction box
30B
7.5A
F32
30
5A
F58
4
Z1*6B
3
Z1*4B
30B<32
0.5
RT/GE
X232*1V
30B<32
0.5
RT/GE
1
E124*1B
E124
Vanity mirror light, rear right
3
E124*1B
31
0.5
BR/SW
X347*1V
30B<32
0.5
RT/GE
30<58
0.35
High variant
1.5
basic version
RT
30
31
31
30
20
27
29
A58*3B
39
A58*2B
X114*1V
KL_VA
0.5
RT/GR
S_IB
0.35
WS/SW
IB_IL
0.5
RT/BL
12
A21*2B
1
A21*4B
4
13
14
A21*2B
High variant
23
22
25
33
41
A172*1B
basic version
A21
Roof function centre
2) Map reading light, left
3) Map reading light, right
4) Interior light
31
2
3
4
8
9
21
3
A172*1B
basic version
1
2
A21*1B
2
A21*4B
6
A21*1B
High variant
30B<32
0.5
RT/WS
30B<32
0.5
RT/WS/GE
31
1.5
BR/SW
31
0.5
BR/WS
S_IB_2
0.35
BL/VI
IB_IL_2
0.5
BL
2
E13*1B
E13
Vanity mirror light, front left
2
E70*1B
E70
Vanity mirror light, front right
4
6
3
E81*1B
E81
Interior light, rear
1) Left-side reading light
2) Reading light, right
3) Interior lighting
1
2
3
1
E13*1B
1
E70*1B
5
2
8
1
E81*1B
S_MKL_L
0.5
GR/SW
S_MKL_R
0.5
GR/SW
S_LL_HL
0.35
BR/GE
LL_HL
0.5
GE
S_LL_HR
0.35
GR/BR
LL_HR
0.5
GN
1
S43*1B
S43
Vanity mirror switch, front left
1
S31*1B
S31
Vanity mirror switch, front right
8
11
9
12
A21*1B
High variant
34
37
35
38
A172*1B
basic version
A21
Roof function centre
31
30
31
30
3
S43*1B
3
S31*1B
31
0.5
BR/SW
31
0.5
BR/SW
X347*1V
X347*1V
X347*1V

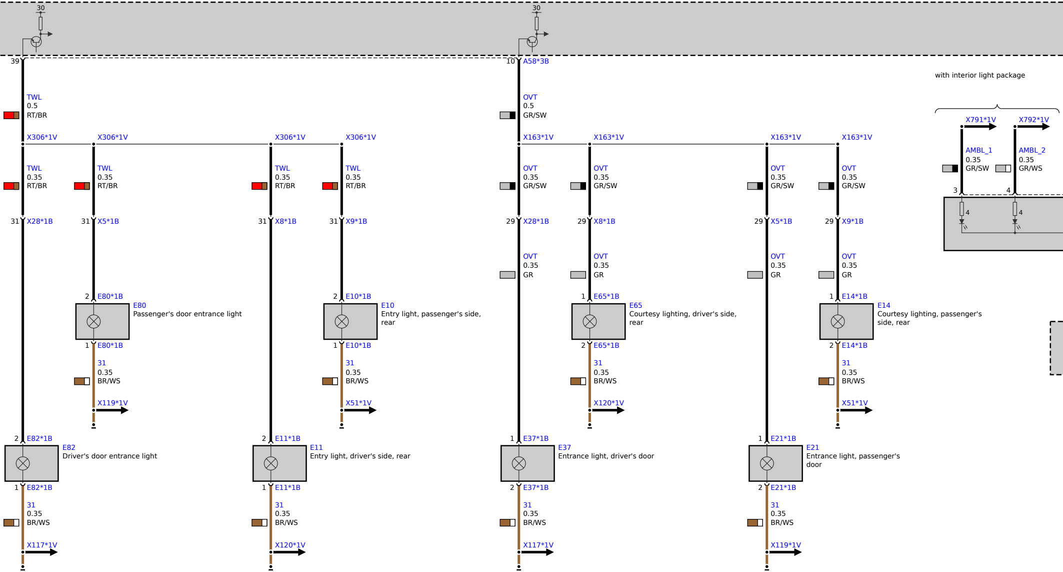
30
30
39
10
A58*3B
with interior light package
TWL
0.5
RT/BR
OVT
0.5
GR/SW
X791*1V
X792*1V
AMBL_1
0.35
GR/SW
AMBL_2
0.35
GR/WS
3
4
4
4
X306*1V
X306*1V
X306*1V
X306*1V
X163*1V
X163*1V
X163*1V
X163*1V
TWL
0.35
RT/BR
TWL
0.35
RT/BR
TWL
0.35
RT/BR
TWL
0.35
RT/BR
OVT
0.35
GR/SW
OVT
0.35
GR/SW
OVT
0.35
GR/SW
OVT
0.35
GR/SW
31
X28*1B
31
X5*1B
31
X8*1B
31
X9*1B
29
X28*1B
29
X8*1B
29
X5*1B
29
X9*1B
OVT
0.35
GR
OVT
0.35
GR
OVT
0.35
GR
OVT
0.35
GR
2
E80*1B
E80
Passenger's door entrance light
1
E80*1B
2
E10*1B
E10
Entry light, passenger's side, rear
1
E10*1B
1
E65*1B
E65
Courtesy lighting, driver's side, rear
2
E65*1B
1
E14*1B
E14
Courtesy lighting, passenger's side, rear
2
E14*1B
31
0.35
BR/WS
X119*1V
31
0.35
BR/WS
X51*1V
31
0.35
BR/WS
X120*1V
31
0.35
BR/WS
X51*1V
2
E82*1B
E82
Driver's door entrance light
1
E82*1B
2
E11*1B
E11
Entry light, driver's side, rear
1
E11*1B
1
E37*1B
E37
Entrance light, driver's door
2
E37*1B
1
E21*1B
E21
Entrance light, passenger's door
2
E21*1B
31
0.35
BR/WS
X117*1V
31
0.35
BR/WS
X120*1V
31
0.35
BR/WS
X117*1V
31
0.35
BR/WS
X119*1V

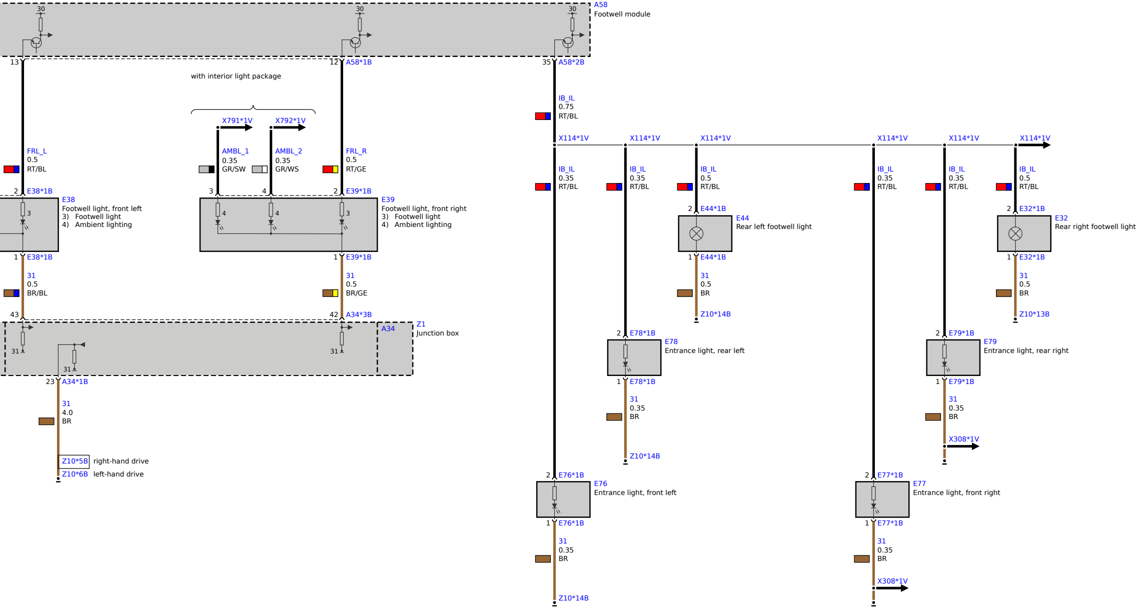
A58
Footwell module
30
30
30
13
12
A58*1B
35
A58*2B
with interior light package
X791*1V
X792*1V
FRL_L
0.5
RT/BL
AMBL_1
0.35
GR/SW
AMBL_2
0.35
GR/WS
FRL_R
0.5
RT/GE
IB_IL
0.75
RT/BL
X114*1V
X114*1V
X114*1V
X114*1V
X114*1V
X114*1V
IB_IL
0.35
RT/BL
IB_IL
0.35
RT/BL
IB_IL
0.5
RT/BL
IB_IL
0.35
RT/BL
IB_IL
0.35
RT/BL
IB_IL
0.5
RT/BL
2
E38*1B
E38
Footwell light, front left
3) Footwell light
4) Ambient lighting
3
3
4
2
E39*1B
E39
Footwell light, front right
3) Footwell light
4) Ambient lighting
4
4
3
2
E44*1B
E44
Rear left footwell light
2
E32*1B
E32
Rear right footwell light
1
E38*1B
1
E39*1B
1
E44*1B
1
E32*1B
31
0.5
BR/BL
31
0.5
BR/GE
31
0.5
BR
Z10*14B
31
0.5
BR
Z10*13B
43
42
A34*3B
Z1
Junction box
A34
31
31
31
23
A34*1B
31
4.0
BR
Z10*5B
right-hand drive
Z10*6B
left-hand drive
2
E78*1B
E78
Entrance light, rear left
1
E78*1B
31
0.35
BR
Z10*14B
2
E79*1B
E79
Entrance light, rear right
1
E79*1B
31
0.35
BR
X308*1V
2
E76*1B
E76
Entrance light, front left
1
E76*1B
31
0.35
BR
Z10*14B
2
E77*1B
E77
Entrance light, front right
1
E77*1B
31
0.35
BR
X308*1V