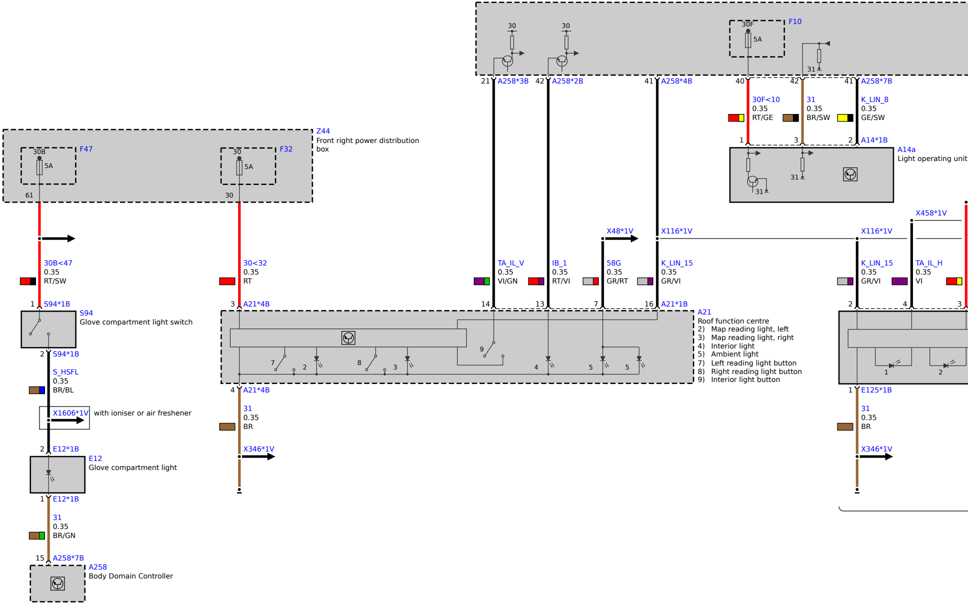
Z44
Front right power distribution box
F47
30B
5A
61
F32
30
5A
30
30B<47
0.35
RT/SW
30<32
0.35
RT
1 S94*1B
S94
Glove compartment light switch
2 S94*1B
S_HSFL
0.35
BR/BL
X1606*1V
with ioniser or air freshener
2 E12*1B
E12
Glove compartment light
1 E12*1B
31
0.35
BR/GN
15 A258*7B
A258
Body Domain Controller
30
30
30F
5A
F10
31
21 A258*3B
42 A258*2B
41 A258*4B
40
42
41 A258*7B
30F<10
0.35
RT/GE
31
0.35
BR/SW
K_LIN_8
0.35
GE/SW
1
3
2 A14*1B
A14a
Light operating unit
31
31
X48*1V
X116*1V
X116*1V
X458*1V
TA_IL_V
0.35
VI/GN
IB_1
0.35
RT/VI
58G
0.35
GR/RT
K_LIN_15
0.35
GR/VI
K_LIN_15
0.35
GR/VI
TA_IL_H
0.35
VI
3 A21*4B
14
13
7
16 A21*1B
2
4
3
A21
Roof function centre
2) Map reading light, left
3) Map reading light, right
4) Interior light
5) Ambient light
7) Left reading light button
8) Right reading light button
9) Interior light button
7
2
8
3
9
4
5
5
1
2
4 A21*4B
31
0.35
BR
X346*1V
1 E125*1B
31
0.35
BR
X346*1V

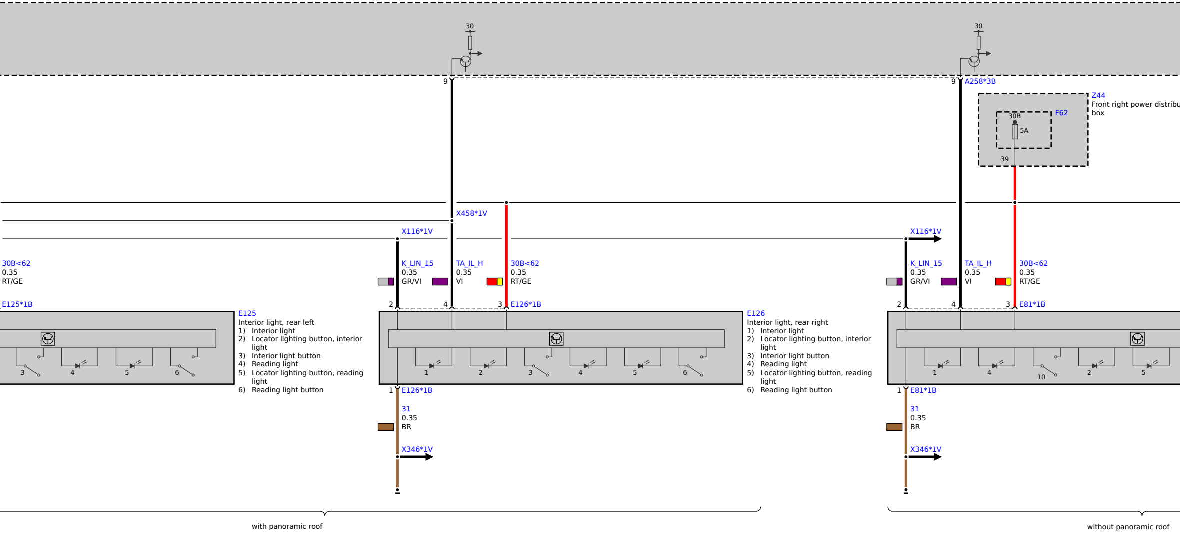
30
9
30
9
A258*3B
Z44
Front right power distribu
box
30B
F62
5A
39
X458*1V
X116*1V
X116*1V
30B<62
0.35
RT/GE
K_LIN_15
0.35
GR/VI
TA_IL_H
0.35
VI
30B<62
0.35
RT/GE
K_LIN_15
0.35
GR/VI
TA_IL_H
0.35
VI
30B<62
0.35
RT/GE
E125*1B
2
4
3
E126*1B
2
4
3
E81*1B
E125
Interior light, rear left
1) Interior light
2) Locator lighting button, interior light
3) Interior light button
4) Reading light
5) Locator lighting button, reading light
6) Reading light button
3
4
5
6
E126
Interior light, rear right
1) Interior light
2) Locator lighting button, interior light
3) Interior light button
4) Reading light
5) Locator lighting button, reading light
6) Reading light button
1
2
3
4
5
6
1
4
10
2
5
1
E126*1B
1
E81*1B
31
0.35
BR
31
0.35
BR
X346*1V
X346*1V
with panoramic roof
without panoramic roof

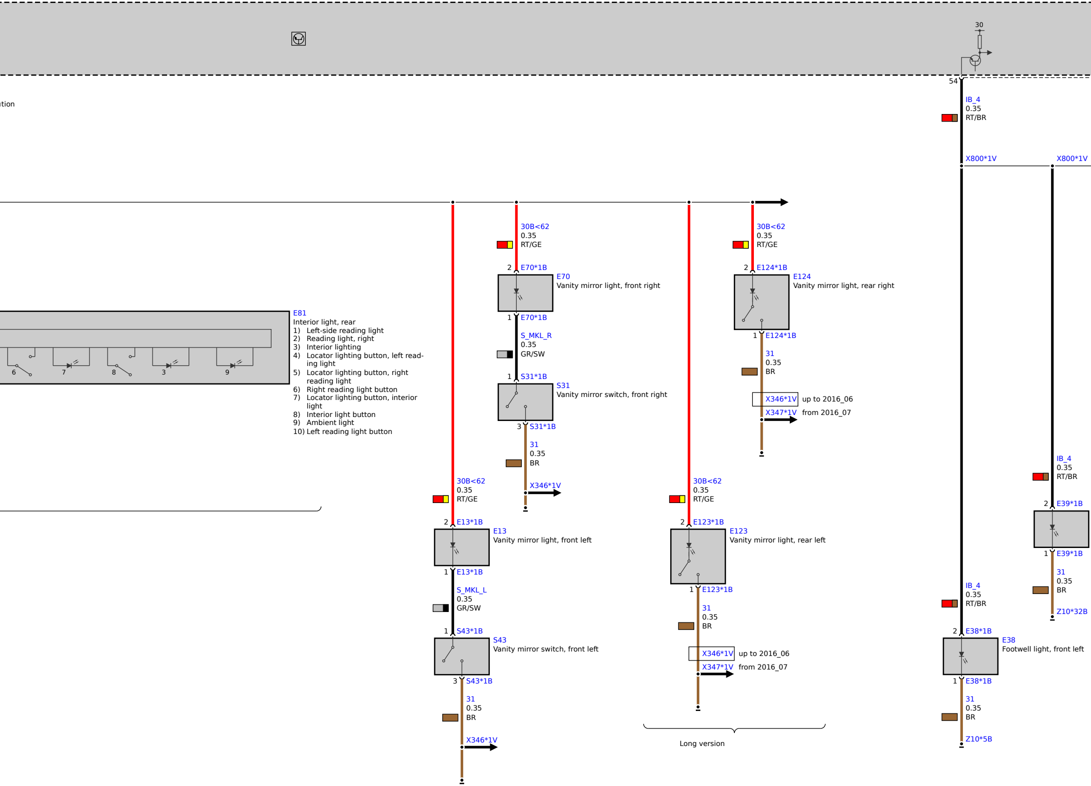
30
54
tion
IB_4
0.35
RT/BR
X800*1V
X800*1V
30B<62
0.35
RT/GE
2 E70*1B
E70
Vanity mirror light, front right
1 E70*1B
S_MKL_R
0.35
GR/SW
1 S31*1B
S31
Vanity mirror switch, front right
3 S31*1B
31
0.35
BR
X346*1V
30B<62
0.35
RT/GE
2 E124*1B
E124
Vanity mirror light, rear right
1 E124*1B
31
0.35
BR
X346*1V up to 2016_06
X347*1V from 2016_07
E81
Interior light, rear
1) Left-side reading light
2) Reading light, right
3) Interior lighting
4) Locator lighting button, left reading light
5) Locator lighting button, right reading light
6) Right reading light button
7) Locator lighting button, interior light
8) Interior light button
9) Ambient light
10) Left reading light button
6
7
8
3
9
30B<62
0.35
RT/GE
2 E13*1B
E13
Vanity mirror light, front left
1 E13*1B
S_MKL_L
0.35
GR/SW
1 S43*1B
S43
Vanity mirror switch, front left
3 S43*1B
31
0.35
BR
X346*1V
30B<62
0.35
RT/GE
2 E123*1B
E123
Vanity mirror light, rear left
1 E123*1B
31
0.35
BR
X346*1V up to 2016_06
X347*1V from 2016_07
Long version
IB_4
0.35
RT/BR
2 E39*1B
1 E39*1B
31
0.35
BR
Z10*32B
IB_4
0.35
RT/BR
2 E38*1B
E38
Footwell light, front left
1 E38*1B
31
0.35
BR
Z10*5B

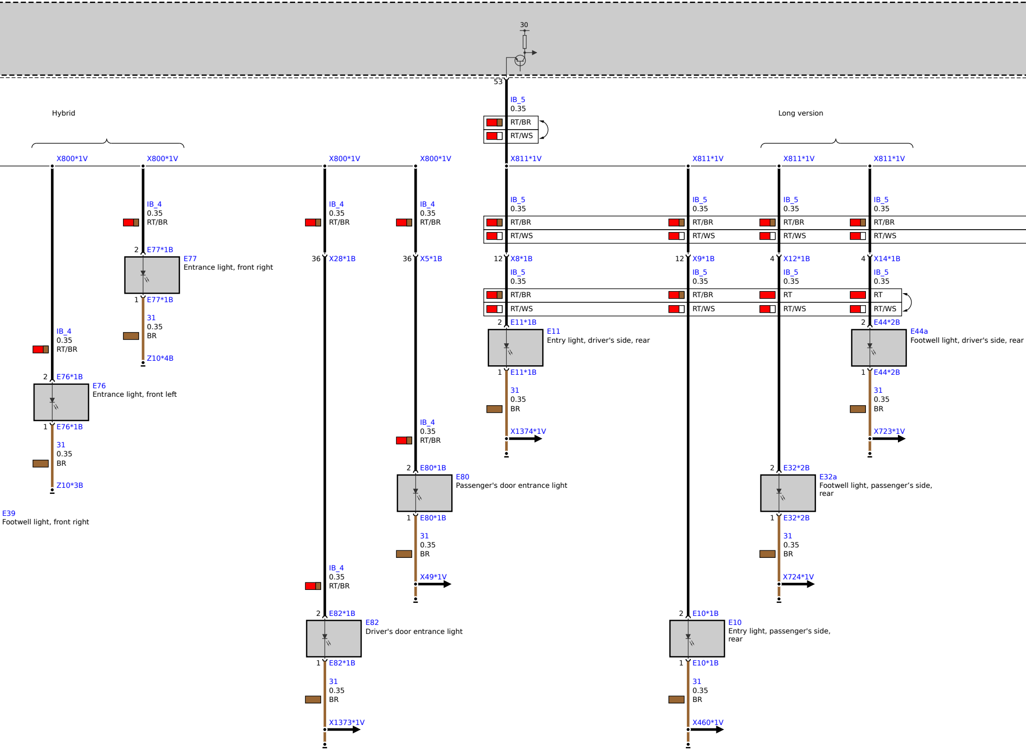
30
53
IB_5
0.35
RT/BR
RT/WS
Hybrid
Long version
X800*1V
X800*1V
X800*1V
X800*1V
X811*1V
X811*1V
X811*1V
X811*1V
IB_4
0.35
RT/BR
2 E77*1B
E77
Entrance light, front right
1 E77*1B
31
0.35
BR
Z10*4B
IB_4
0.35
RT/BR
2 E76*1B
E76
Entrance light, front left
1 E76*1B
31
0.35
BR
Z10*3B
E39
Footwell light, front right
IB_4
0.35
RT/BR
36 X28*1B
IB_4
0.35
RT/BR
2 E82*1B
E82
Driver's door entrance light
1 E82*1B
31
0.35
BR
X1373*1V
IB_4
0.35
RT/BR
36 X5*1B
IB_4
0.35
RT/BR
2 E80*1B
E80
Passenger's door entrance light
1 E80*1B
31
0.35
BR
X49*1V
IB_5
0.35
RT/BR
RT/WS
12 X8*1B
IB_5
0.35
RT/BR
RT/WS
2 E11*1B
E11
Entry light, driver's side, rear
1 E11*1B
31
0.35
BR
X1374*1V
IB_5
0.35
RT/BR
RT/WS
12 X9*1B
IB_5
0.35
RT/BR
RT/WS
2 E10*1B
E10
Entry light, passenger's side, rear
1 E10*1B
31
0.35
BR
X460*1V
IB_5
0.35
RT/BR
RT/WS
4 X12*1B
IB_5
0.35
RT
RT/WS
2 E32*2B
E32a
Footwell light, passenger’s side, rear
1 E32*2B
31
0.35
BR
X724*1V
IB_5
0.35
RT/BR
RT/WS
4 X14*1B
IB_5
0.35
RT
RT/WS
2 E44*2B
E44a
Footwell light, driver's side, rear
1 E44*2B
31
0.35
BR
X723*1V

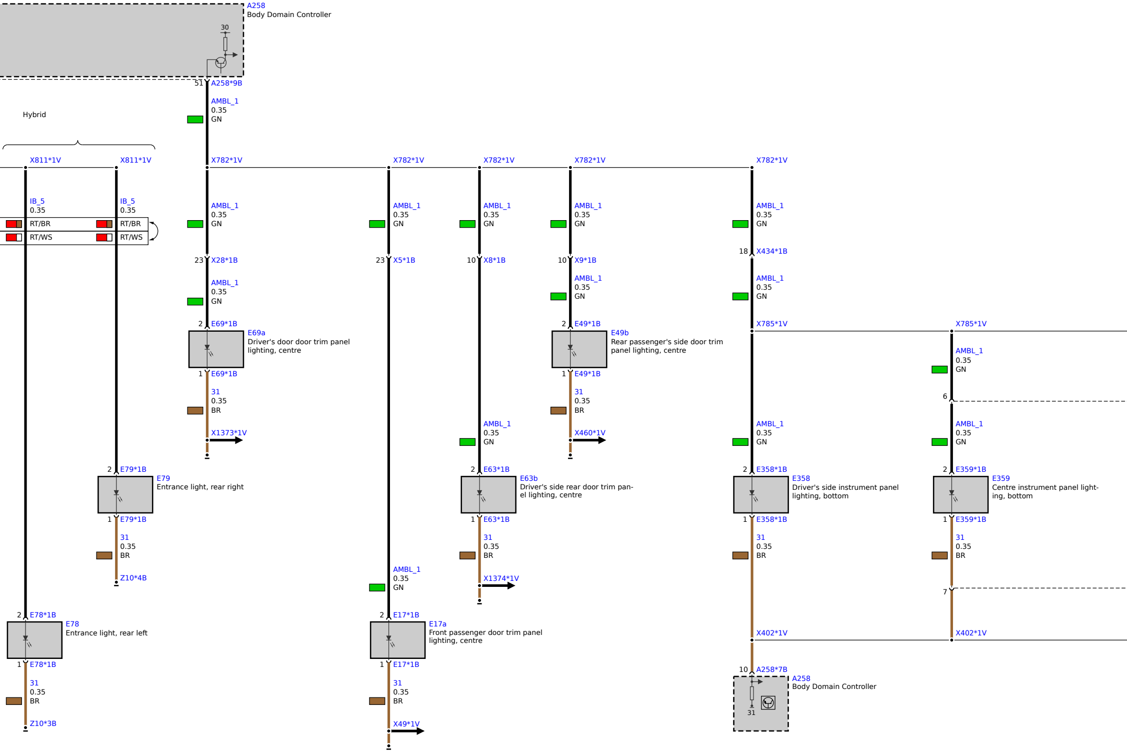
A258
Body Domain Controller
30
51
A258*9B
AMBL_1
0.35
GN
Hybrid
X811*1V
X811*1V
X782*1V
X782*1V
X782*1V
X782*1V
X782*1V
IB_5
0.35
RT/BR
RT/WS
IB_5
0.35
RT/BR
RT/WS
AMBL_1
0.35
GN
AMBL_1
0.35
GN
AMBL_1
0.35
GN
AMBL_1
0.35
GN
AMBL_1
0.35
GN
23
X28*1B
23
X5*1B
10
X8*1B
10
X9*1B
18
X434*1B
AMBL_1
0.35
GN
AMBL_1
0.35
GN
AMBL_1
0.35
GN
2
E69*1B
E69a
Driver's door door trim panel lighting, centre
1
E69*1B
31
0.35
BR
X1373*1V
2
E49*1B
E49b
Rear passenger's side door trim panel lighting, centre
1
E49*1B
31
0.35
BR
X460*1V
X785*1V
X785*1V
AMBL_1
0.35
GN
6
AMBL_1
0.35
GN
AMBL_1
0.35
GN
AMBL_1
0.35
GN
2
E79*1B
E79
Entrance light, rear right
1
E79*1B
31
0.35
BR
Z10*4B
2
E63*1B
E63b
Driver's side rear door trim panel lighting, centre
1
E63*1B
31
0.35
BR
X1374*1V
2
E358*1B
E358
Driver's side instrument panel lighting, bottom
1
E358*1B
31
0.35
BR
2
E359*1B
E359
Centre instrument panel lighting, bottom
1
E359*1B
31
0.35
BR
7
X402*1V
X402*1V
AMBL_1
0.35
GN
2
E78*1B
E78
Entrance light, rear left
1
E78*1B
31
0.35
BR
Z10*3B
2
E17*1B
E17a
Front passenger door trim panel lighting, centre
1
E17*1B
31
0.35
BR
X49*1V
10
A258*7B
A258
Body Domain Controller
31

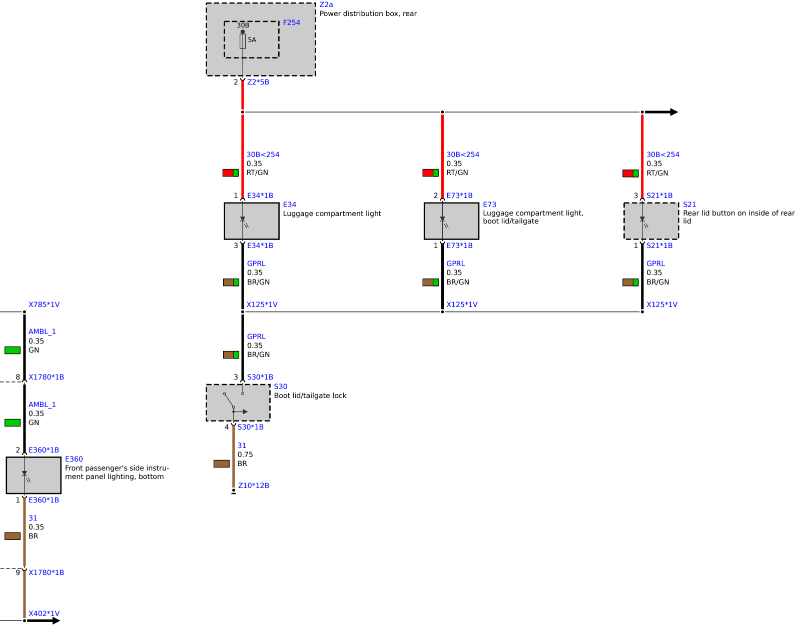
Z2a
Power distribution box, rear
F254
30B
5A
2 Z2*5B
30B<254
0.35
RT/GN
1 E34*1B
E34
Luggage compartment light
3 E34*1B
GPRL
0.35
BR/GN
X125*1V
GPRL
0.35
BR/GN
3 S30*1B
S30
Boot lid/tailgate lock
4 S30*1B
31
0.75
BR
Z10*12B
30B<254
0.35
RT/GN
2 E73*1B
E73
Luggage compartment light,
boot lid/tailgate
1 E73*1B
GPRL
0.35
BR/GN
X125*1V
30B<254
0.35
RT/GN
3 S21*1B
S21
Rear lid button on inside of rear
lid
1 S21*1B
GPRL
0.35
BR/GN
X125*1V
X785*1V
AMBL_1
0.35
GN
8 X1780*1B
AMBL_1
0.35
GN
2 E360*1B
E360
Front passenger's side instru-
ment panel lighting, bottom
1 E360*1B
31
0.35
BR
9 X1780*1B
X402*1V