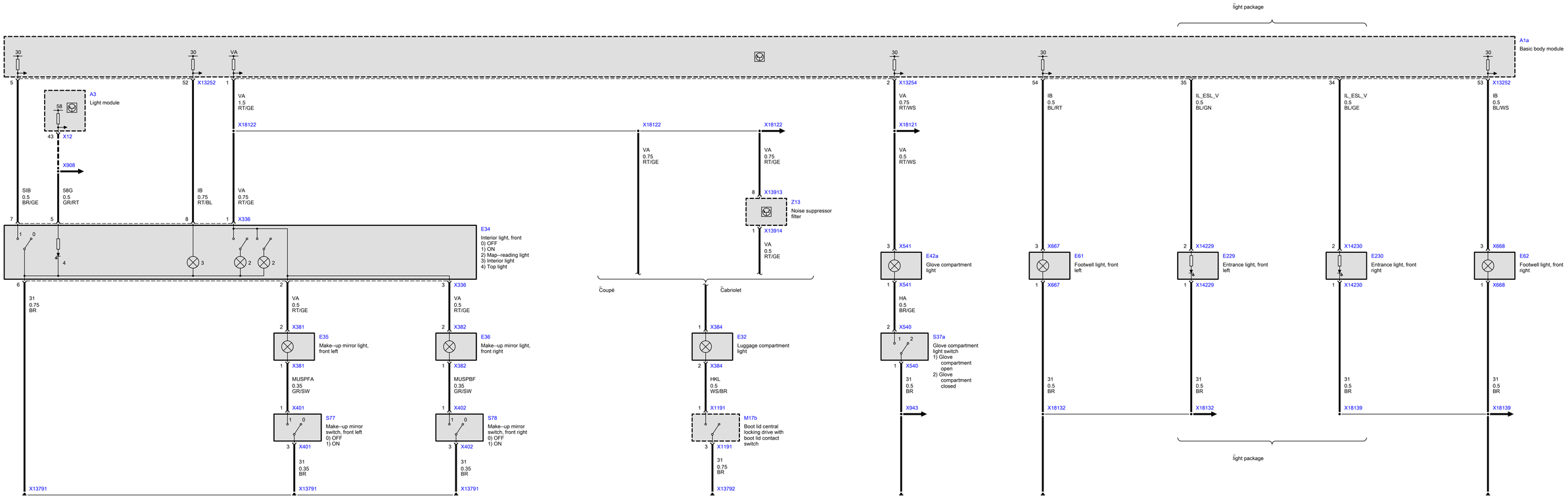
light package
A1a
Basic body module
30
5
52
X13252
1
VA
VA
1.5
RT/GE
A3
Light module
58
43
X12
X908
X18122
SIB
0.5
BR/GE
58G
0.5
GR/RT
IB
0.75
RT/BL
VA
0.75
RT/GE
7
5
9
1
X336
E34
Interior light, front
0) OFF
1) ON
2) Map--reading light
3) Interior light
4) Top light
6
31
0.75
BR
2
VA
0.5
RT/GE
X381
E35
Make--up mirror light, front left
X381
MUSPFA
0.35
GR/SW
X401
S77
Make--up mirror switch, front left
0) OFF
1) ON
X401
31
0.35
BR
X13791
3
X336
VA
0.5
RT/GE
X382
E36
Make--up mirror light, front right
X382
MUSPBF
0.35
GR/SW
X402
S78
Make--up mirror switch, front right
0) OFF
1) ON
X402
31
0.35
BR
X13791
X18122
VA
0.75
RT/GE
X18122
VA
0.75
RT/GE
8
X13913
Z13
Noise suppressor filter
1
X13914
VA
0.5
RT/GE
Coupé
Cabriolet
X384
E32
Luggage compartment light
X384
HKL
0.5
WS/BR
X1191
M17b
Boot lid central locking drive with boot lid contact switch
X1191
31
0.75
BR
X13792
2
X13254
VA
0.75
RT/WS
X18121
VA
0.5
RT/WS
X541
E42a
Glove compartment light
X541
HA
0.5
BR/GE
X540
S37a
Glove compartment light switch
1) Glove compartment open
2) Glove compartment closed
X540
31
0.5
BR
X943
54
IB
0.5
BL/RT
X667
E61
Footwell light, front left
X667
31
0.5
BR
X18132
35
IL_ESL_V
0.5
BL/GN
X14229
E229
Entrance light, front left
X14229
31
0.5
BR
X18132
34
IL_ESL_V
0.5
BL/GE
X14230
E230
Entrance light, front right
X14230
31
0.5
BR
X18139
53
X13252
IB
0.5
BL/WS
X668
E62
Footwell light, front right
X668
31
0.5
BR
X18139
light package