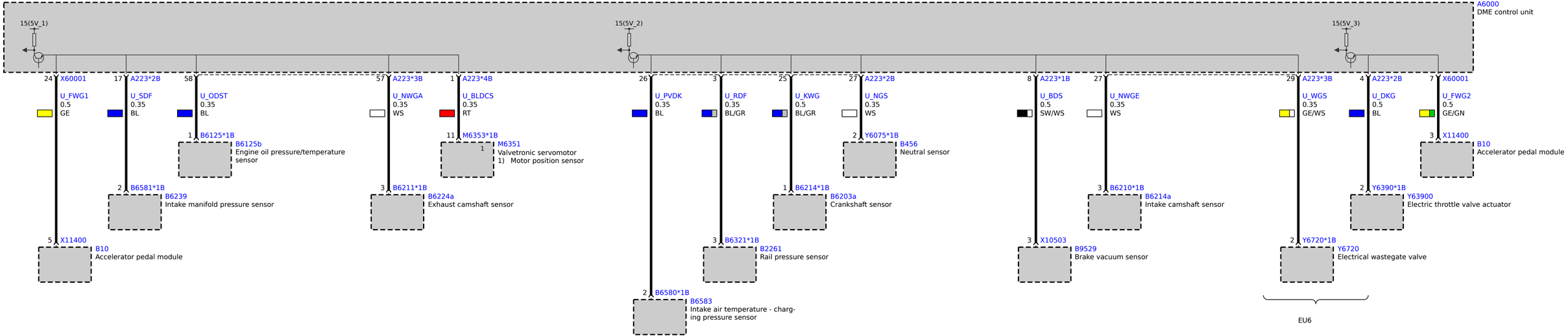
A6000
DME control unit
15(5V_1)
15(5V_2)
15(5V_3)
24 X60001
U_FWG1
0.5
GE
5 X11400
B10
Accelerator pedal module
17 A223*2B
U_SDF
0.35
BL
2 B6581*1B
B6239
Intake manifold pressure sensor
58 U_ODST
0.35
BL
1 B6125*1B
B6125b
Engine oil pressure/temperature sensor
57 A223*3B
U_NWGA
0.35
WS
3 B6211*1B
B6224a
Exhaust camshaft sensor
1 A223*4B
U_BLDCS
0.35
RT
11 M6353*1B
M6351
Valvetronic servomotor
1) Motor position sensor
26 U_PVDK
0.35
BL
2 B6580*1B
B6583
Intake air temperature - charging pressure sensor
3 U_RDF
0.35
BL/GR
3 B6321*1B
B2261
Rail pressure sensor
25 U_KWG
0.5
BL/GR
1 B6214*1B
B6203a
Crankshaft sensor
27 A223*2B
U_NGS
0.35
WS
2 Y6075*1B
B456
Neutral sensor
8 A223*1B
U_BDS
0.5
SW/WS
3 X10503
B9529
Brake vacuum sensor
27 U_NWGE
0.35
WS
3 B6210*1B
B6214a
Intake camshaft sensor
29 A223*3B
U_WGS
0.35
GE/WS
2 Y6720*1B
Y6720
Electrical wastegate valve
4 A223*2B
U_DKG
0.5
BL
2 Y6390*1B
Y63900
Electric throttle valve actuator
7 X60001
U_FWG2
0.5
GE/GN
3 X11400
B10
Accelerator pedal module
EU6