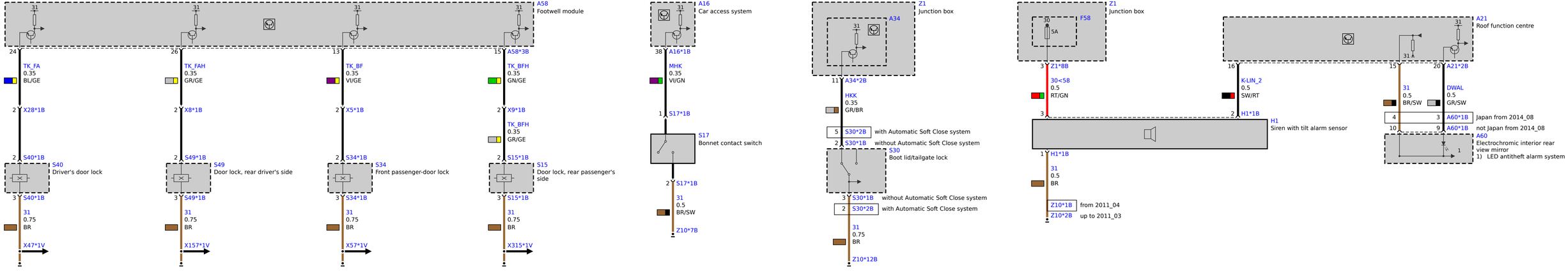
A58
Footwell module
24
TK_FA
0.35
BL/GE
2
X28*1B
2
S40*1B
S40
Driver's door lock
3
S40*1B
31
0.75
BR
X47*1V
26
TK_FAH
0.35
GR/GE
2
X8*1B
2
S49*1B
S49
Door lock, rear driver's side
3
S49*1B
31
0.75
BR
X157*1V
13
TK_BF
0.35
VI/GE
2
X5*1B
2
S34*1B
S34
Front passenger-door lock
3
S34*1B
31
0.75
BR
X57*1V
15
A58*3B
TK_BFH
0.35
GN/GE
2
X9*1B
TK_BFH
0.35
GR/GE
2
S15*1B
S15
Door lock, rear passenger's side
3
S15*1B
31
0.75
BR
X315*1V
A16
Car access system
38
A16*1B
MHK
0.35
VI/GN
1
S17*1B
S17
Bonnet contact switch
2
S17*1B
31
0.5
BR/SW
Z10*7B
Z1
Junction box
A34
11
A34*2B
HKK
0.35
GR/BR
5
S30*2B
with Automatic Soft Close system
2
S30*1B
without Automatic Soft Close system
S30
Boot lid/tailgate lock
3
S30*1B
without Automatic Soft Close system
2
S30*2B
with Automatic Soft Close system
31
0.75
BR
Z10*12B
Z1
Junction box
F58
30
5A
3
Z1*8B
30<58
0.5
RT/GN
3
1
H1*1B
31
0.5
BR
Z10*1B
from 2011_04
Z10*2B
up to 2011_03
16
K-LIN_2
0.5
SW/RT
2
H1*1B
H1
Siren with tilt alarm sensor
A21
Roof function centre
15
31
0.5
BR/SW
20
A21*2B
DWAL
0.5
GR/SW
4
3
A60*1B
Japan from 2014_08
10
9
A60*1B
not Japan from 2014_08
A60
Electrochromic interior rear view mirror
1) LED antitheft alarm system