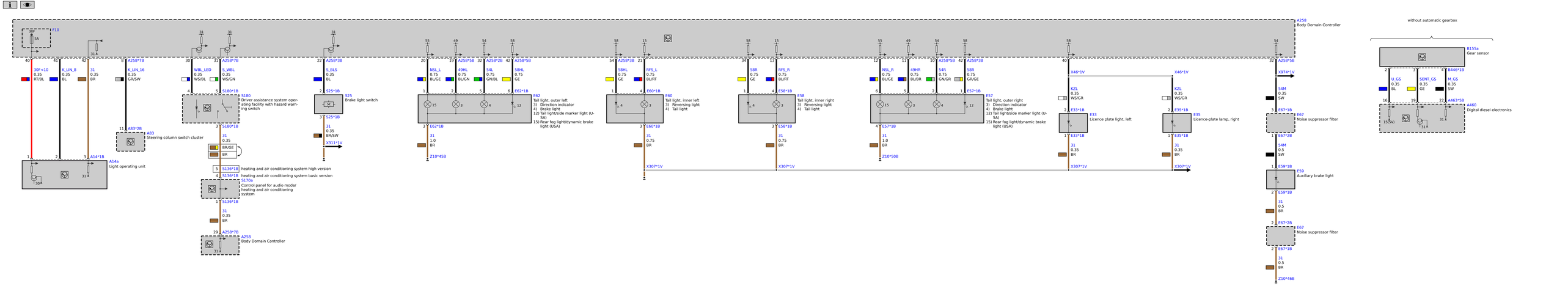
F10
5A
30F<10
0.35
RT/BL
K_LIN_8
0.35
BL
31
0.35
BR
A258*7B
K_LIN_16
0.35
GR/SW
A14a
Light operating unit
A83*2B
A83
Steering column switch cluster
WBL_LED
0.35
WS/BL
S_WBL
0.35
WS/GN
S180*1B
S180
Driver assistance system operating facility with hazard warning switch
BR/GE
BR
S136*1B
heating and air conditioning system high version
heating and air conditioning system basic version
S170a
Control panel for audio mode/ heating and air conditioning system
A258
Body Domain Controller
S_BLS
0.35
BL
S25*1B
S25
Brake light switch
BR/SW
X311*1V
NSL_L
0.75
BL/GE
49HL
0.75
BL/GN
54L
0.75
GN/BL
58HL
0.75
GE
E62*1B
E62
Tail light, outer left
3) Direction indicator
4) Brake light
12) Tail light/side marker light (U-SA)
15) Rear fog light/dynamic brake light (USA)
Z10*45B
X307*1V
RFS_L
0.75
BL/RT
E60*1B
E60
Tail light, inner left
3) Reversing light
4) Tail light
E58*1B
E58
Tail light, inner right
3) Reversing light
4) Tail light
NSL_R
0.75
BL/GE
49HR
0.75
BL/BR
54R
0.75
GN/GR
58R
0.75
GR/GE
E57*1B
E57
Tail light, outer right
3) Direction indicator
4) Brake light
12) Tail light/side marker light (U-SA)
15) Rear fog light/dynamic brake light (USA)
Z10*50B
X46*1V
KZL
0.35
WS/GR
E33*1B
E33
Licence plate light, left
E35*1B
E35
Licence-plate lamp, right
A258
Body Domain Controller
X974*1V
54M
0.35
SW
E67*1B
E67
Noise suppressor filter
E67*2B
54M
0.5
SW
E59*1B
E59
Auxiliary brake light
E59*1B
31
0.5
BR
E67*2B
E67
Noise suppressor filter
E67*1B
Z10*46B
without automatic gearbox
B155a
Gear sensor
U_GS
0.35
BL
5ENT_GS
0.35
GE
M_GS
0.35
SW
B446*1B
A463*5B
A460
Digital diesel electronics
15(5V)