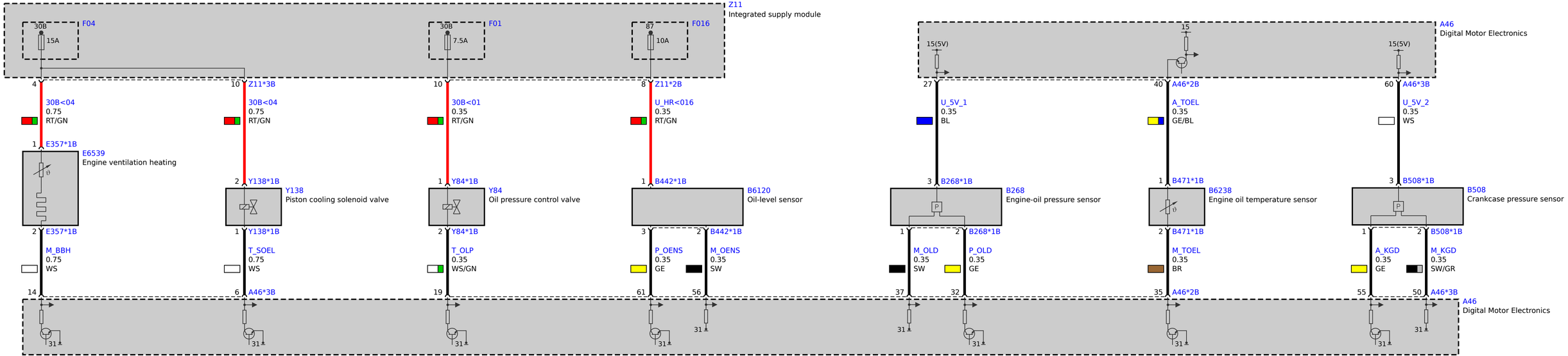
Z11
Integrated supply module
30B
F04
15A
30B
F01
7.5A
87
F016
10A
A46
Digital Motor Electronics
15(5V)
15
15(5V)
4
30B<04
0.75
RT/GN
10
Z11*3B
30B<04
0.75
RT/GN
10
30B<01
0.35
RT/GN
8
Z11*2B
U_HR<016
0.35
RT/GN
27
U_5V_1
0.35
BL
40
A46*2B
A_TOEL
0.35
GE/BL
60
A46*3B
U_5V_2
0.35
WS
1
E357*1B
E6539
Engine ventilation heating
2
Y138*1B
Y138
Piston cooling solenoid valve
1
Y84*1B
Y84
Oil pressure control valve
1
B442*1B
B6120
Oil-level sensor
3
B268*1B
B268
Engine-oil pressure sensor
1
B471*1B
B6238
Engine oil temperature sensor
3
B508*1B
B508
Crankcase pressure sensor
2
E357*1B
M_BBH
0.75
WS
1
Y138*1B
T_SOEL
0.75
WS
2
Y84*1B
T_OLP
0.35
WS/GN
3
P_OENS
0.35
GE
2
B442*1B
M_OENS
0.35
SW
1
B268*1B
M_OLD
0.35
SW
2
B268*1B
P_OLD
0.35
GE
2
B471*1B
M_TOEL
0.35
BR
1
B508*1B
A_KGD
0.35
GE
2
B508*1B
M_KGD
0.35
SW/GR
14
6
A46*3B
19
61
56
37
32
35
A46*2B
55
50
A46*3B
A46
Digital Motor Electronics
31
31
31
31
31
31
31
31
31