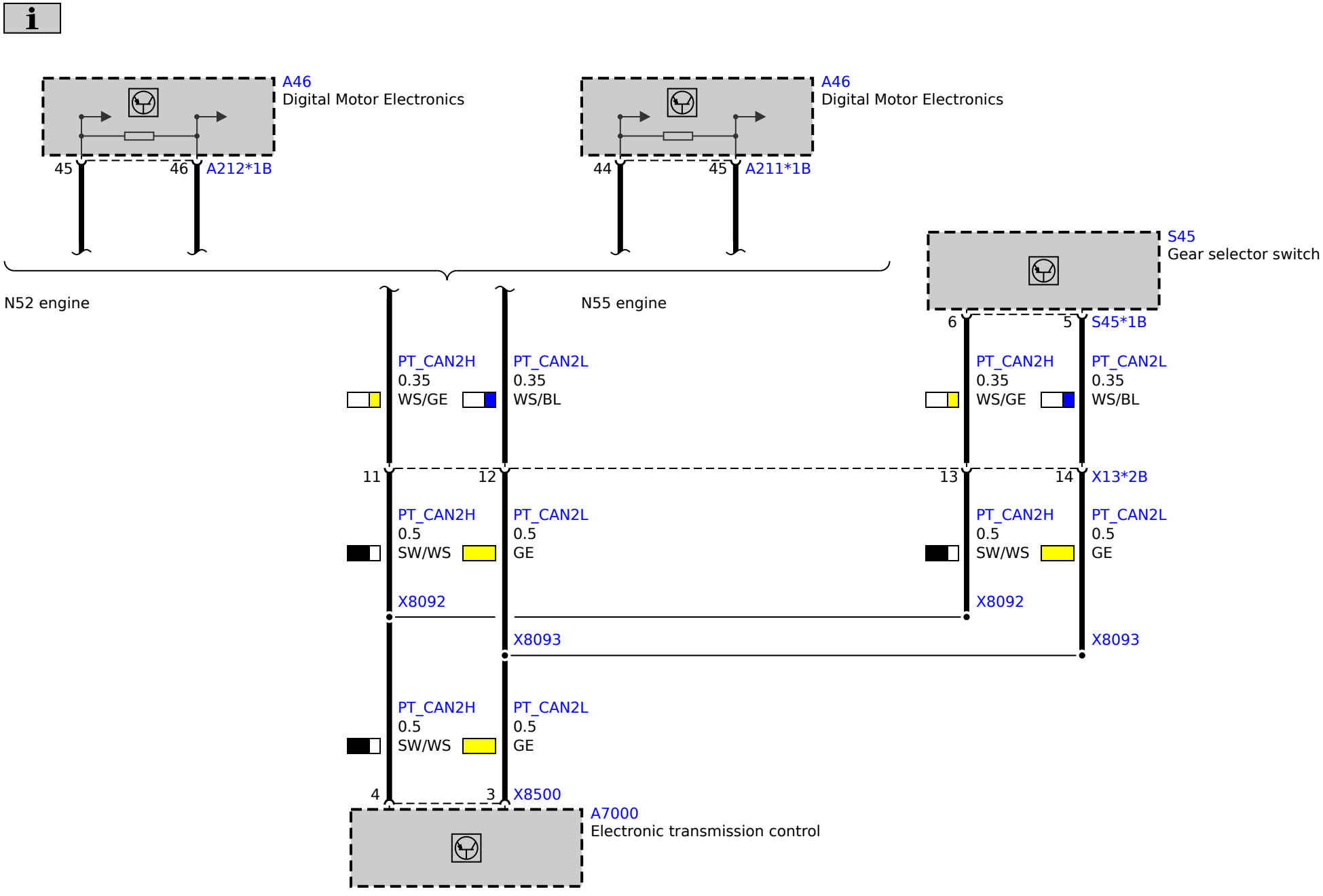
A46
Digital Motor Electronics
45
46
A212*1B
A46
Digital Motor Electronics
44
45
A211*1B
N52 engine
N55 engine
S45
Gear selector switch
6
5
S45*1B
PT_CAN2H
0.35
WS/GE
PT_CAN2L
0.35
WS/BL
PT_CAN2H
0.35
WS/GE
PT_CAN2L
0.35
WS/BL
11
12
13
14
X13*2B
PT_CAN2H
0.5
SW/WS
PT_CAN2L
0.5
GE
PT_CAN2H
0.5
SW/WS
PT_CAN2L
0.5
GE
X8092
X8092
X8093
X8093
PT_CAN2H
0.5
SW/WS
PT_CAN2L
0.5
GE
4
3
X8500
A7000
Electronic transmission control