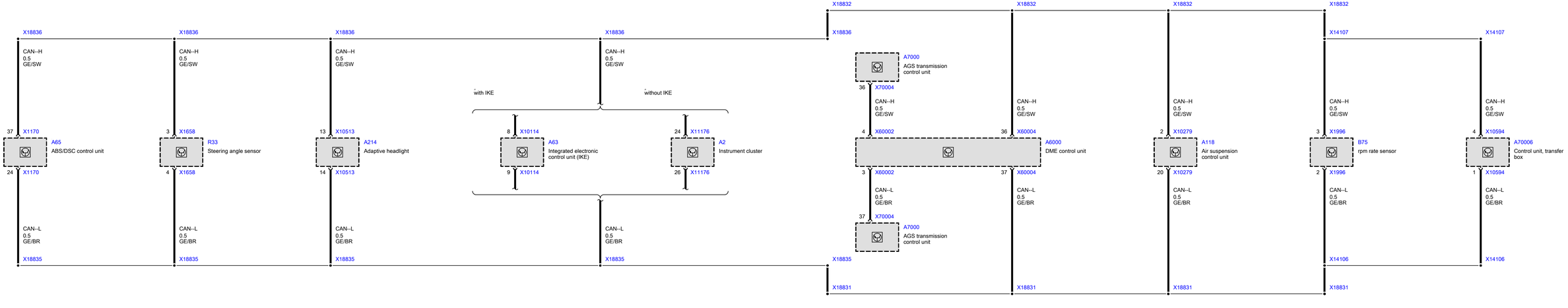
X18836
CAN--H
0.5
GE/SW
37
X1170
A65
ABS/DSC control unit
24
X1170
CAN--L
0.5
GE/BR
X18835
X18836
CAN--H
0.5
GE/SW
3
X1658
R33
Steering angle sensor
4
X1658
CAN--L
0.5
GE/BR
X18835
X18836
CAN--H
0.5
GE/SW
13
X10513
A214
Adaptive headlight
14
X10513
CAN--L
0.5
GE/BR
X18835
X18836
CAN--H
0.5
GE/SW
with IKE
without IKE
8
X10114
A63
Integrated electronic control unit (IKE)
9
X10114
24
X11176
A2
Instrument cluster
26
X11176
CAN--L
0.5
GE/BR
X18835
X18832
X18836
A7000
AGS transmission control unit
36
X70004
CAN--H
0.5
GE/SW
4
X60002
3
X60002
CAN--L
0.5
GE/BR
37
X70004
A7000
AGS transmission control unit
X18835
X18831
X18832
CAN--H
0.5
GE/SW
36
X60004
A6000
DME control unit
37
X60004
CAN--L
0.5
GE/BR
X18831
X18832
CAN--H
0.5
GE/SW
2
X10279
A118
Air suspension control unit
20
X10279
CAN--L
0.5
GE/BR
X18831
X18832
X14107
CAN--H
0.5
GE/SW
3
X1996
B75
rpm rate sensor
2
X1996
CAN--L
0.5
GE/BR
X14106
X18831
X14107
CAN--H
0.5
GE/SW
4
X10594
A70006
Control unit, transfer box
1
X10594
CAN--L
0.5
GE/BR
X14106