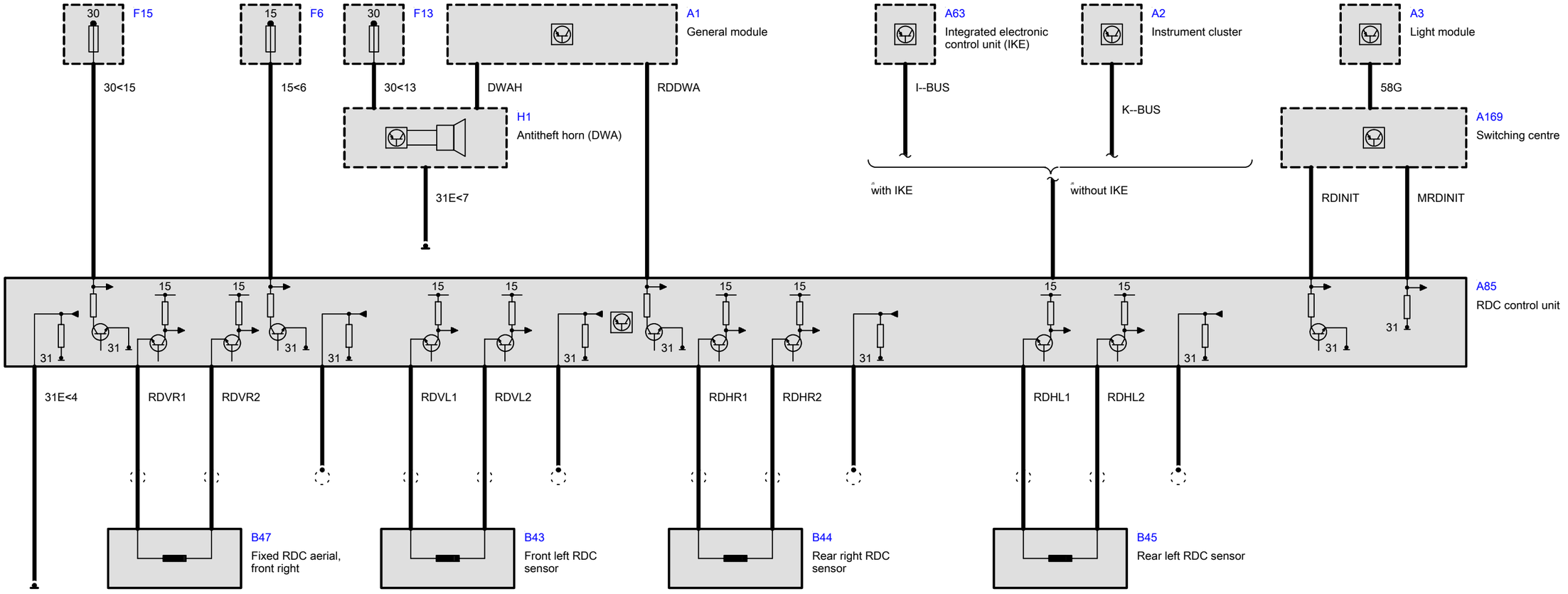
30
F15
15
F6
30
F13
A1
General module
A63
Integrated electronic control unit (IKE)
A2
Instrument cluster
A3
Light module
30<15
15<6
30<13
DWAH
RDDWA
I--BUS
K--BUS
58G
H1
Antitheft horn (DWA)
A169
Switching centre
31E<7
with IKE
without IKE
RDINIT
MRDINIT
A85
RDC control unit
15
31
31E<4
RDVR1
RDVR2
RDVL1
RDVL2
RDHR1
RDHR2
RDHL1
RDHL2
B47
Fixed RDC aerial, front right
B43
Front left RDC sensor
B44
Rear right RDC sensor
B45
Rear left RDC sensor