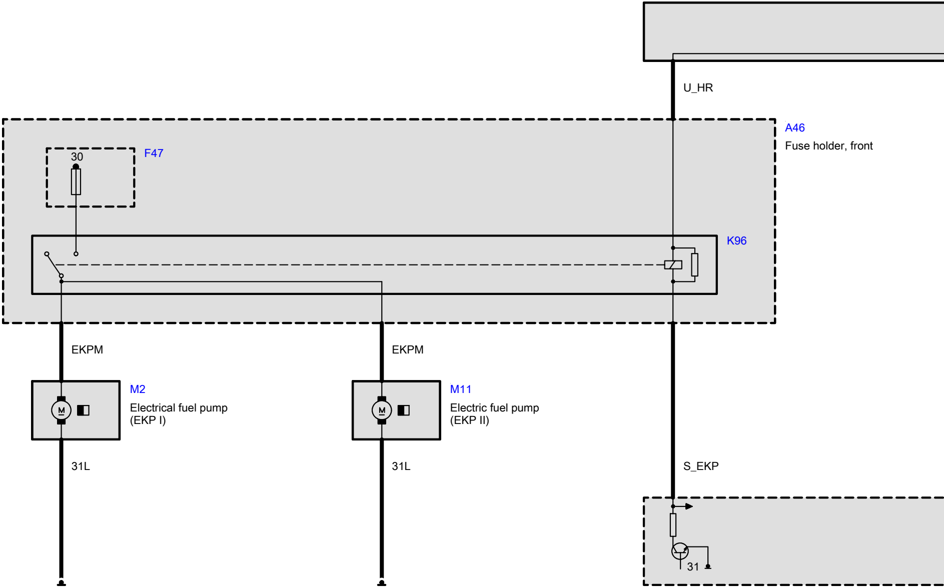
U_HR
A46
Fuse holder, front
F47
30
K96
EKPM
EKPM
M2
Electrical fuel pump
(EKP I)
M11
Electric fuel pump
(EKP II)
31L
31L
S_EKP
31

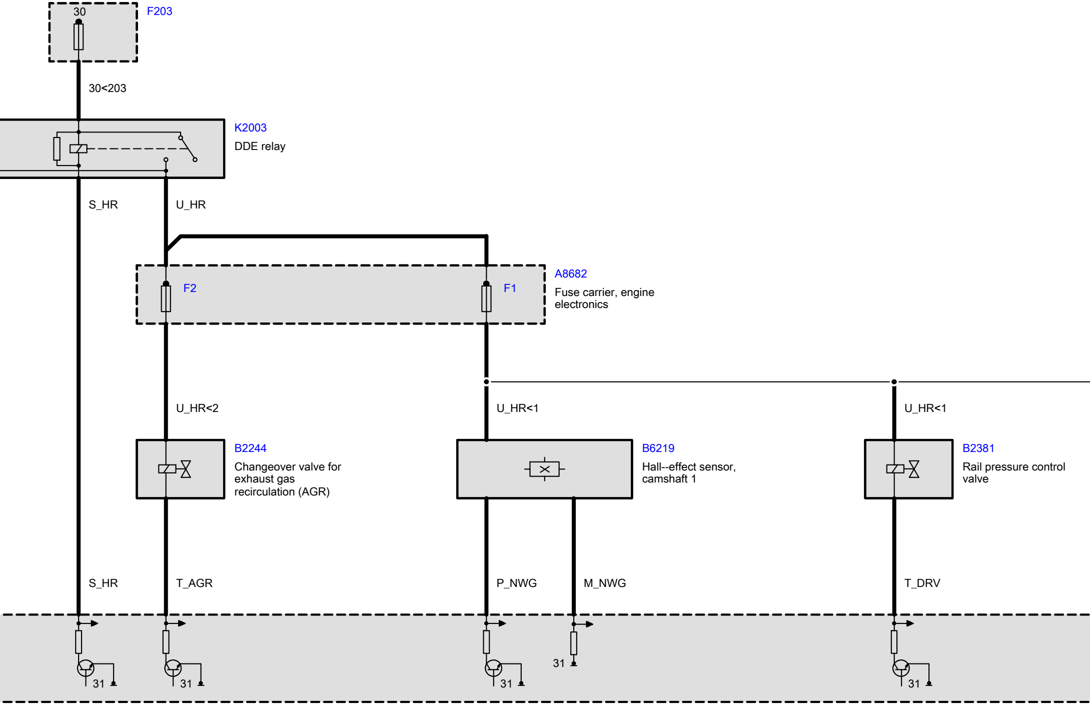
30
F203
30<203
K2003
DDE relay
S_HR
U_HR
A8682
Fuse carrier, engine electronics
F2
F1
U_HR<2
U_HR<1
U_HR<1
B2244
Changeover valve for exhaust gas recirculation (AGR)
B6219
Hall--effect sensor, camshaft 1
B2381
Rail pressure control valve
S_HR
T_AGR
P_NWG
M_NWG
T_DRV
31
31
31
31
31

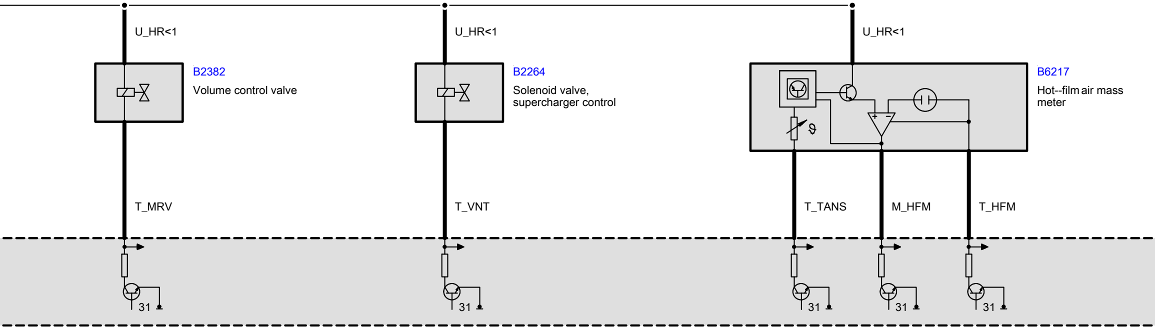
U_HR<1
U_HR<1
U_HR<1
B2382
Volume control valve
B2264
Solenoid valve, supercharger control
B6217
Hot--film air mass meter
T_MRV
T_VNT
T_TANS
M_HFM
T_HFM
31
31
31
31
31

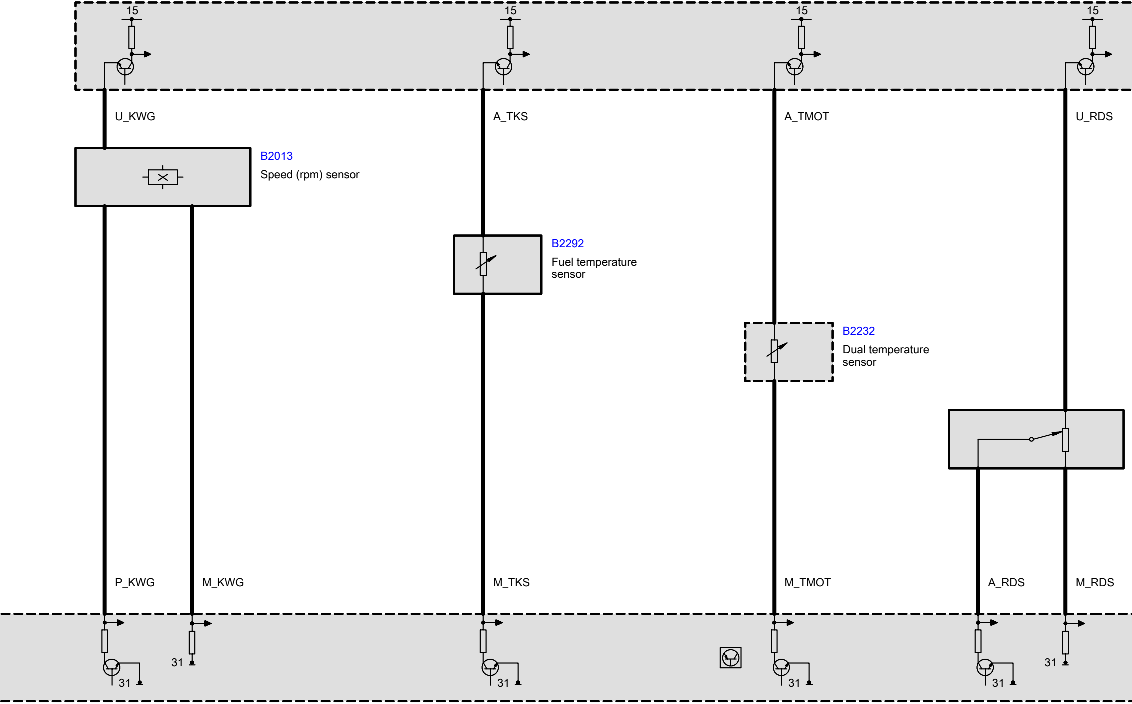
15
15
15
15
U_KWG
A_TKS
A_TMOT
U_RDS
B2013
Speed (rpm) sensor
B2292
Fuel temperature sensor
B2232
Dual temperature sensor
P_KWG
M_KWG
M_TKS
M_TMOT
A_RDS
M_RDS
31
31
31
31
31
31

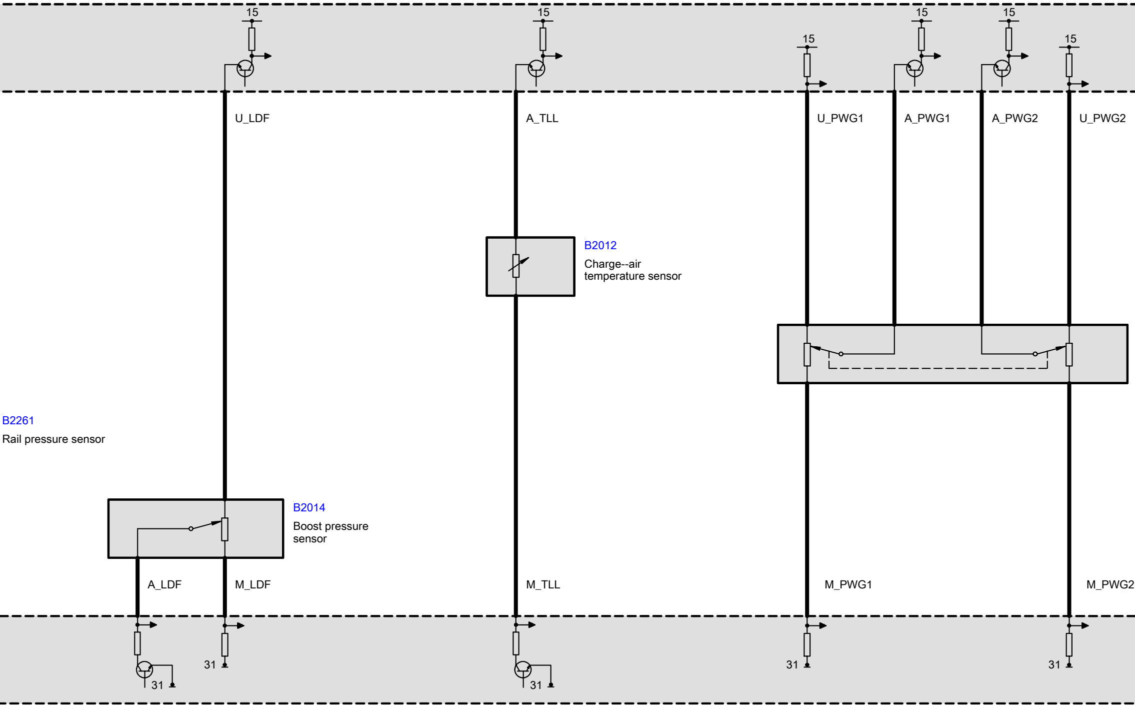
15
15
15
15
15
15
U_LDF
A_TLL
U_PWG1
A_PWG1
A_PWG2
U_PWG2
B2012
Charge--air temperature sensor
B2261
Rail pressure sensor
B2014
Boost pressure sensor
A_LDF
M_LDF
M_TLL
M_PWG1
M_PWG2
31
31
31
31
31

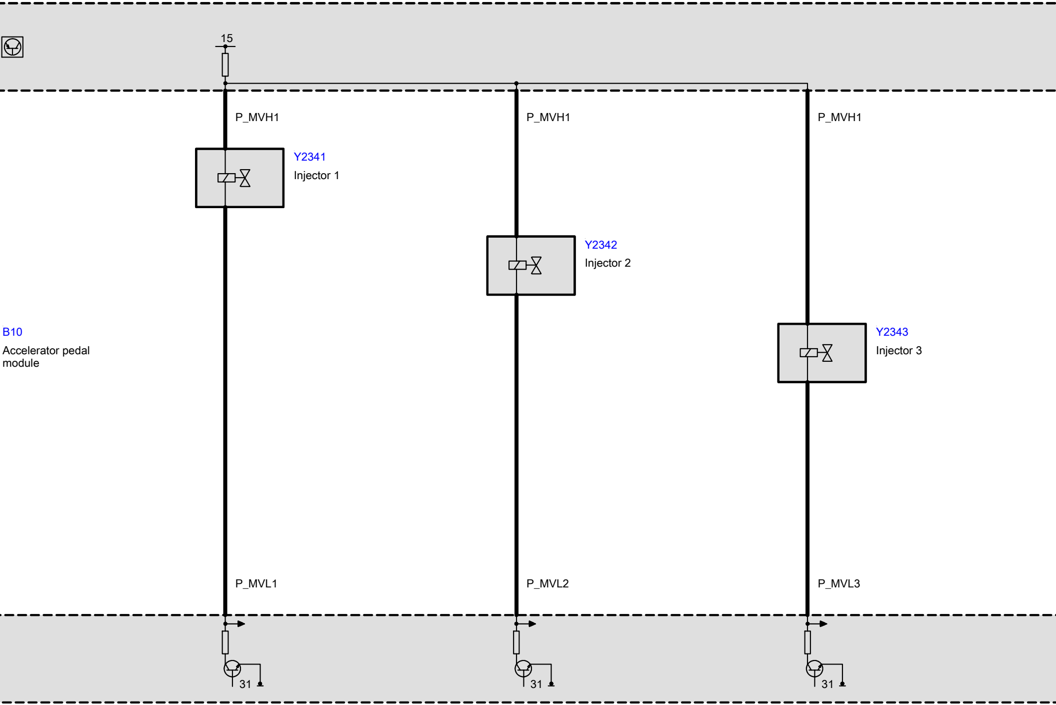
15
P_MVH1
P_MVH1
P_MVH1
Y2341
Injector 1
Y2342
Injector 2
B10
Accelerator pedal module
Y2343
Injector 3
P_MVL1
P_MVL2
P_MVL3
31
31
31

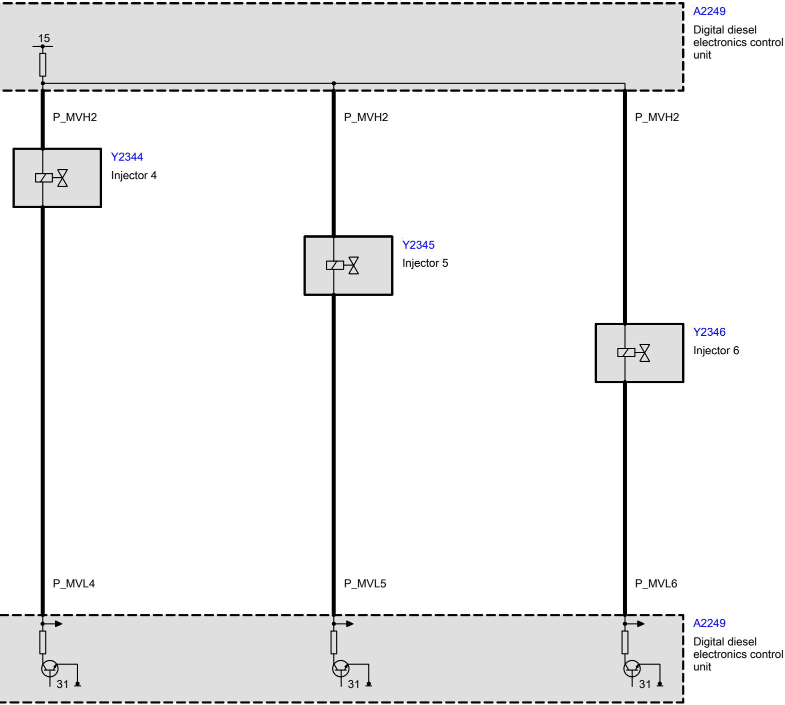
A2249
Digital diesel electronics control unit
15
P_MVH2
P_MVH2
P_MVH2
Y2344
Injector 4
Y2345
Injector 5
Y2346
Injector 6
P_MVL4
P_MVL5
P_MVL6
A2249
Digital diesel electronics control unit
31
31
31