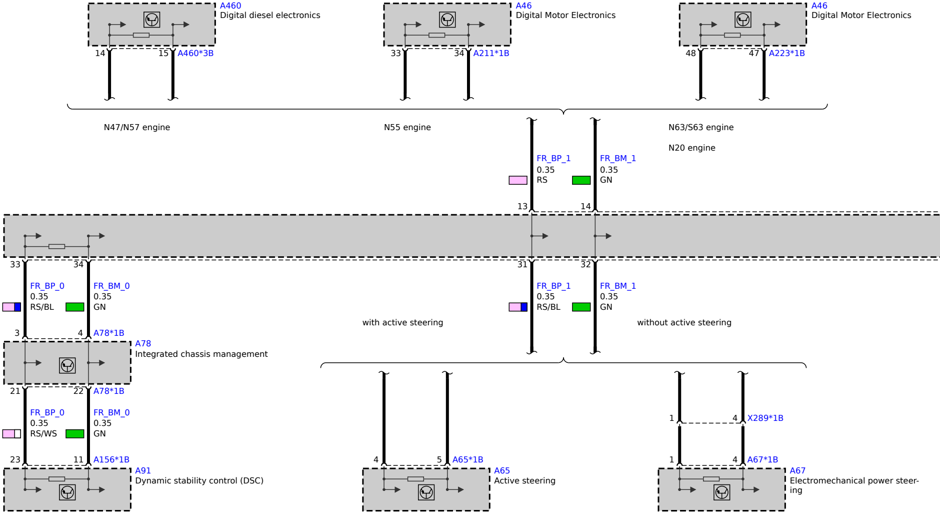
A460
Digital diesel electronics
14
15
A460*3B
A46
Digital Motor Electronics
33
34
A211*1B
A46
Digital Motor Electronics
48
47
A223*1B
N47/N57 engine
N55 engine
N63/S63 engine
N20 engine
FR_BP_1
0.35
RS
FR_BM_1
0.35
GN
13
14
33
34
31
32
FR_BP_0
0.35
RS/BL
FR_BM_0
0.35
GN
FR_BP_1
0.35
RS/BL
FR_BM_1
0.35
GN
with active steering
without active steering
3
4
A78*1B
A78
Integrated chassis management
21
22
A78*1B
FR_BP_0
0.35
RS/WS
FR_BM_0
0.35
GN
23
11
A156*1B
A91
Dynamic stability control (DSC)
4
5
A65*1B
A65
Active steering
1
4
X289*1B
1
4
A67*1B
A67
Electromechanical power steering

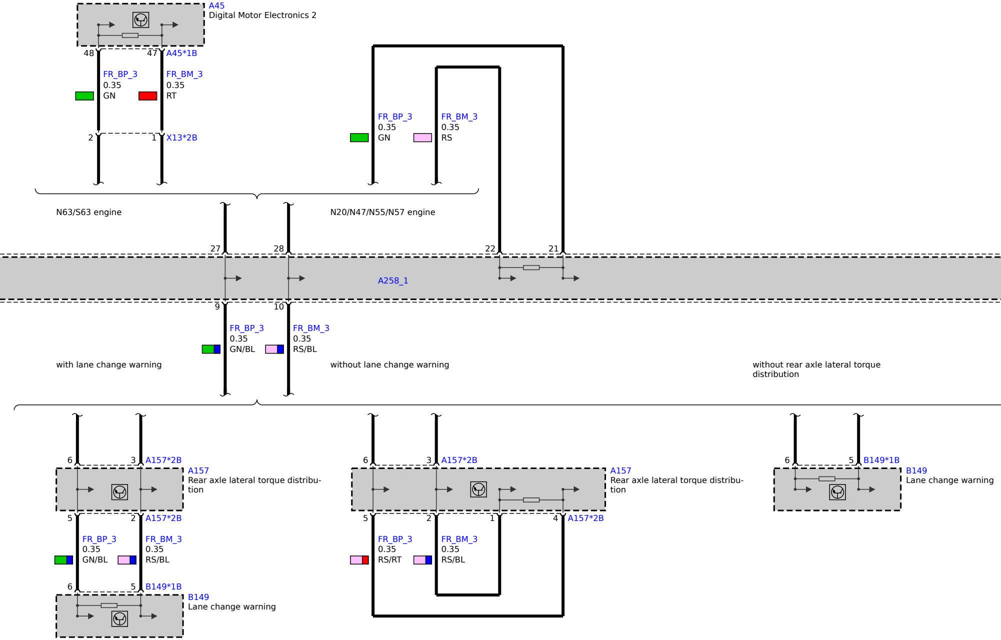
A45
Digital Motor Electronics 2
48
47
A45*1B
FR_BP_3
0.35
GN
FR_BM_3
0.35
RT
2
1
X13*2B
FR_BP_3
0.35
GN
FR_BM_3
0.35
RS
N63/S63 engine
N20/N47/N55/N57 engine
27
28
22
21
A258_1
9
10
FR_BP_3
0.35
GN/BL
FR_BM_3
0.35
RS/BL
with lane change warning
without lane change warning
without rear axle lateral torque distribution
6
3
A157*2B
A157
Rear axle lateral torque distribution
5
2
A157*2B
FR_BP_3
0.35
GN/BL
FR_BM_3
0.35
RS/BL
6
5
B149*1B
B149
Lane change warning
6
3
A157*2B
A157
Rear axle lateral torque distribution
5
2
1
4
A157*2B
FR_BP_3
0.35
RS/RT
FR_BM_3
0.35
RS/BL
6
5
B149*1B
B149
Lane change warning

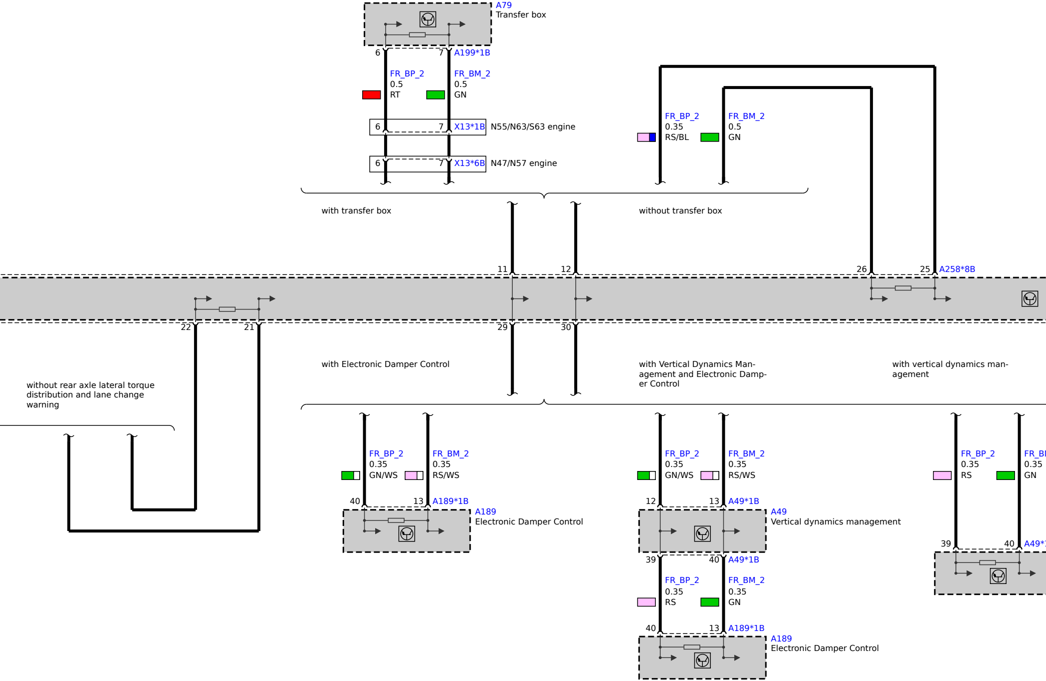
A79
Transfer box
6
7
A199*1B
FR_BP_2
0.5
RT
FR_BM_2
0.5
GN
6
7
X13*1B
N55/N63/S63 engine
6
7
X13*6B
N47/N57 engine
FR_BP_2
0.35
RS/BL
FR_BM_2
0.5
GN
with transfer box
without transfer box
11
12
26
25
A258*8B
22
21
29
30
with Electronic Damper Control
with Vertical Dynamics Management and Electronic Damper Control
with vertical dynamics management
without rear axle lateral torque distribution and lane change warning
FR_BP_2
0.35
GN/WS
FR_BM_2
0.35
RS/WS
40
13
A189*1B
A189
Electronic Damper Control
FR_BP_2
0.35
GN/WS
FR_BM_2
0.35
RS/WS
12
13
A49*1B
A49
Vertical dynamics management
39
40
A49*1B
FR_BP_2
0.35
RS
FR_BM_2
0.35
GN
40
13
A189*1B
A189
Electronic Damper Control
FR_BP_2
0.35
RS
0.35
GN
39
40

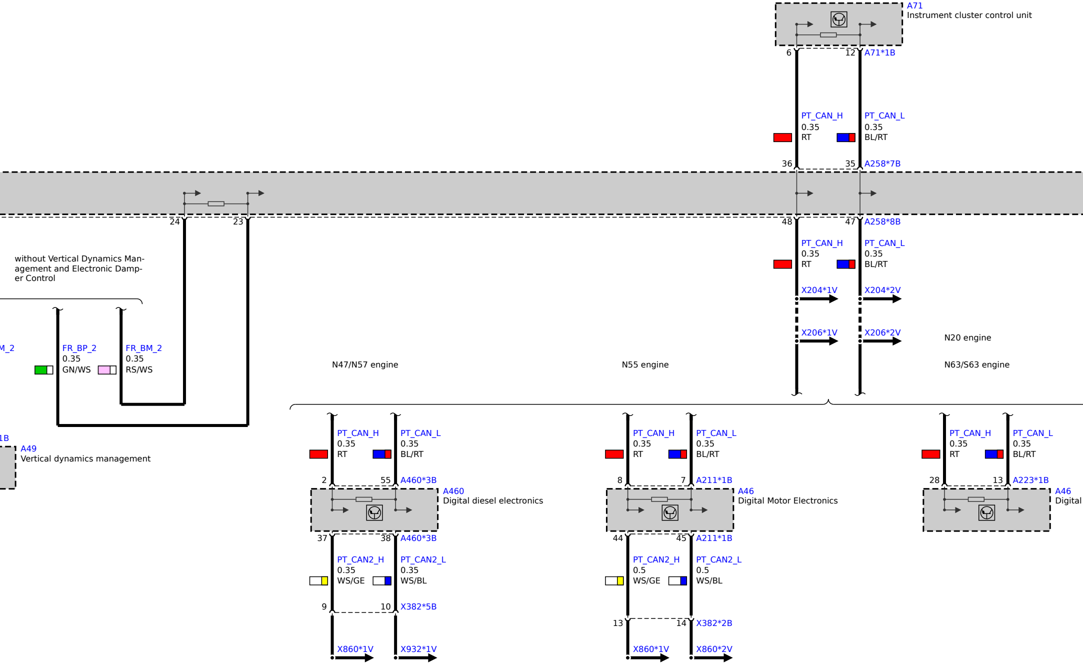
A71
Instrument cluster control unit
6
12
A71*1B
PT_CAN_H
0.35
RT
PT_CAN_L
0.35
BL/RT
36
35
A258*7B
24
23
48
47
A258*8B
PT_CAN_H
0.35
RT
PT_CAN_L
0.35
BL/RT
X204*1V
X204*2V
X206*1V
X206*2V
without Vertical Dynamics Management and Electronic Damper Control
M_2
FR_BP_2
0.35
GN/WS
FR_BM_2
0.35
RS/WS
N20 engine
N47/N57 engine
N55 engine
N63/S63 engine
1B
A49
Vertical dynamics management
PT_CAN_H
0.35
RT
PT_CAN_L
0.35
BL/RT
2
55
A460*3B
A460
Digital diesel electronics
37
38
A460*3B
PT_CAN2_H
0.35
WS/GE
PT_CAN2_L
0.35
WS/BL
9
10
X382*5B
X860*1V
X932*1V
PT_CAN_H
0.35
RT
PT_CAN_L
0.35
BL/RT
8
7
A211*1B
A46
Digital Motor Electronics
44
45
A211*1B
PT_CAN2_H
0.5
WS/GE
PT_CAN2_L
0.5
WS/BL
13
14
X382*2B
X860*1V
X860*2V
PT_CAN_H
0.35
RT
PT_CAN_L
0.35
BL/RT
28
13
A223*1B
A46
Digital

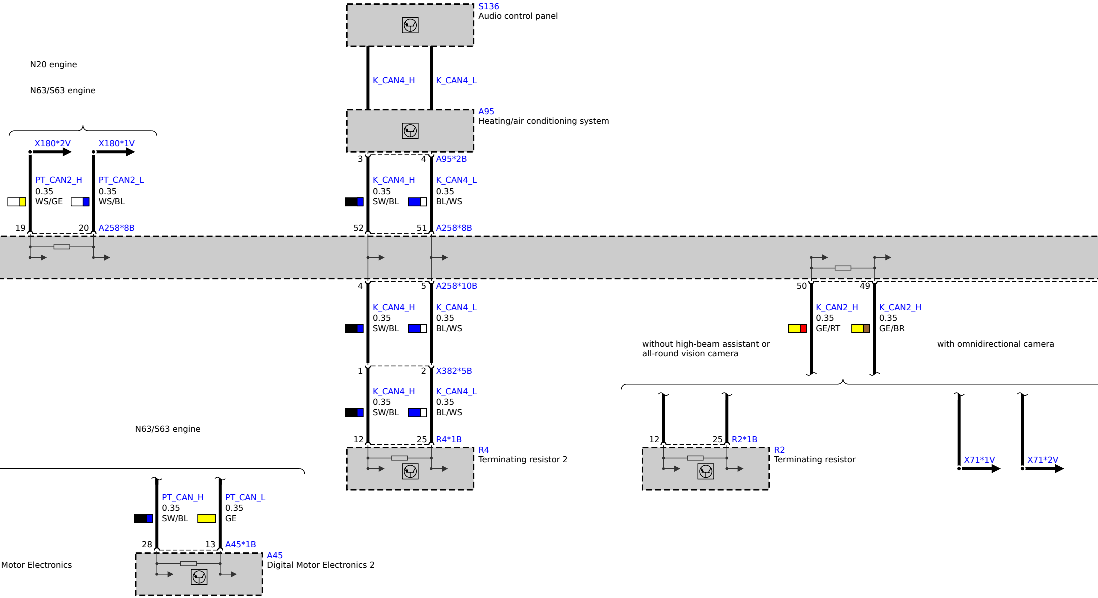
S136
Audio control panel
K_CAN4_H
K_CAN4_L
A95
Heating/air conditioning system
3
4
A95*2B
K_CAN4_H
0.35
SW/BL
K_CAN4_L
0.35
BL/WS
52
51
A258*8B
N20 engine
N63/S63 engine
X180*2V
X180*1V
PT_CAN2_H
0.35
WS/GE
PT_CAN2_L
0.35
WS/BL
19
20
A258*8B
4
5
A258*10B
K_CAN4_H
0.35
SW/BL
K_CAN4_L
0.35
BL/WS
1
2
X382*5B
K_CAN4_H
0.35
SW/BL
K_CAN4_L
0.35
BL/WS
12
25
R4*1B
R4
Terminating resistor 2
50
49
K_CAN2_H
0.35
GE/RT
K_CAN2_H
0.35
GE/BR
without high-beam assistant or
all-round vision camera
with omnidirectional camera
12
25
R2*1B
R2
Terminating resistor
X71*1V
X71*2V
N63/S63 engine
PT_CAN_H
0.35
SW/BL
PT_CAN_L
0.35
GE
28
13
A45*1B
A45
Digital Motor Electronics 2
Motor Electronics

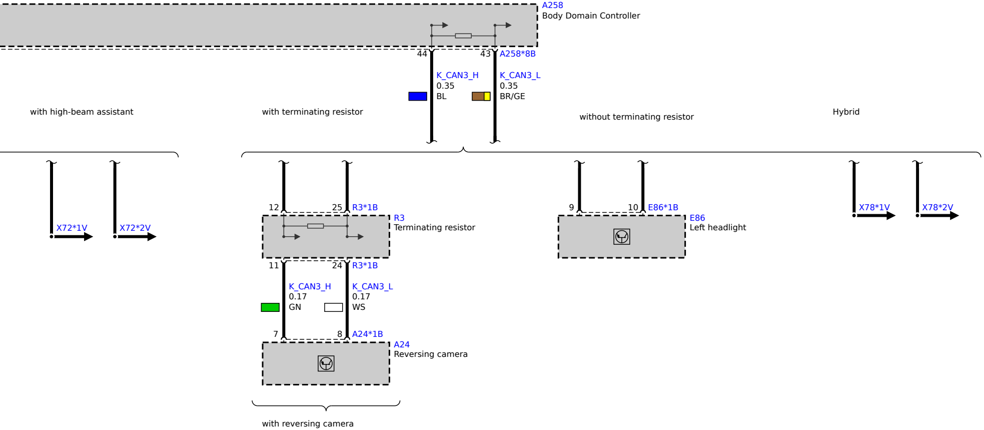
A258
Body Domain Controller
44
43
A258*8B
K_CAN3_H
0.35
BL
K_CAN3_L
0.35
BR/GE
with high-beam assistant
with terminating resistor
without terminating resistor
Hybrid
X72*1V
X72*2V
12
25
R3*1B
R3
Terminating resistor
11
24
R3*1B
K_CAN3_H
0.17
GN
K_CAN3_L
0.17
WS
7
8
A24*1B
A24
Reversing camera
with reversing camera
9
10
E86*1B
E86
Left headlight
X78*1V
X78*2V