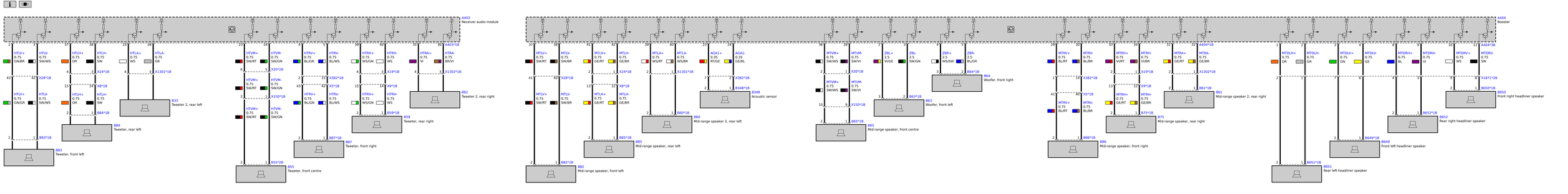
A603
Receiver audio module
HTLV+ 0.75 GN/BR
HTLV- 0.75 SW/WS
X28*1B
HTLV+ 0.75 GN/GR
HTLV- 0.75 SW/WS
B83*1B
B83
Tweeter, front left
HTLH+ 0.75 OR
HTLH- 0.75 SW
X24*1B
HTLH+ 0.75 OR
HTLH- 0.75 SW
X8*1B
B84*1B
B84
Tweeter, rear left
HTLA+ 0.75 WS
HTLA- 0.75 GR
X1301*1B
B33
Tweeter 2, rear left
HTVM+ 0.75 SW/RT
HTVM- 0.75 SW/GN
X20*1B
HTVM+ 0.75 SW/RT
HTVM- 0.75 SW/GN
X150*1B
HTVM+ 0.75 SW/RT
HTVM- 0.75 SW/GN
B55*2B
B55
Tweeter, front centre
HTRV+ 0.75 BL/GN
HTRV- 0.75 BL/WS
X382*1B
HTRV+ 0.75 BL/GN
HTRV- 0.75 BL/WS
X5*1B
B87*1B
B87
Tweeter, front right
HTRH+ 0.75 WS/GN
HTRH- 0.75 WS
X19*1B
HTRH+ 0.75 WS/GN
HTRH- 0.75 WS
B59*1B
B59
Tweeter, rear right
HTRA+ 0.75 VI
HTRA- 0.75 BR/VI
X1302*1B
B62
Tweeter 2, rear right
A603*1B
MTLV+ 0.75 SW/RT
MTLV- 0.75 SW/BR
X28*1B
MTLV+ 0.75 SW/RT
MTLV- 0.75 SW/BR
B82*1B
B82
Mid-range speaker, front left
MTLH+ 0.75 GE/RT
MTLH- 0.75 GE/BR
X24*1B
MTLH+ 0.75 GE/RT
MTLH- 0.75 GE/BR
X8*1B
B85*1B
B85
Mid-range speaker, rear left
MTLA+ 0.75 WS/RT
MTLA- 0.75 WS/BR
X1301*1B
B60*1B
B60
Mid-range speaker 2, rear left
AGA1+ 0.35 RT/GE
AGA1- 0.35 GE/BL
X382*2B
B348*1B
B348
Acoustic sensor
MTVM+ 0.75 SW/WS
MTVM- 0.75 SW/VI
X20*1B
MTVM+ 0.75 SW/WS
MTVM- 0.75 SW/VI
X150*1B
B65*1B
B65
Mid-range speaker, front centre
ZBL+ 2.5 VI/GE
ZBL- 2.5 SW/GN
B63*1B
B63
Woofer, front left
ZBR+ 2.5 WS/SW
ZBR- 2.5 BL/GR
B64*1B
B64
Woofer, front right
MTRV+ 0.75 BL/RT
MTRV- 0.75 BL/BR
X382*1B
X5*1B
B86*1B
B86
Mid-range speaker, front right
MTRH+ 0.75 GE/RT
MTRH- 0.75 GE/BR
X19*1B
B75*1B
B75
Mid-range speaker, rear right
MTRA+ 0.75 GE/RT
MTRA- 0.75 GE/BR
X1302*1B
B61*1B
B61
Mid-range speaker 2, rear right
A604*1B
A604
Booster
MTDLH+ 0.75 OR
MTDLH- 0.75 GR
MTDLV+ 0.75 GN
MTDLV- 0.75 GE
MTDRH+ 0.75 BL
MTDRH- 0.75 VI
MTDRV+ 0.75 WS
MTDRV- 0.75 SW
X1871*2B
B650*1B
B650
Front right headliner speaker
B652*1B
B652
Rear right headliner speaker
B649*1B
B649
Front left headliner speaker
B651*1B
B651
Rear left headliner speaker
A604*1B