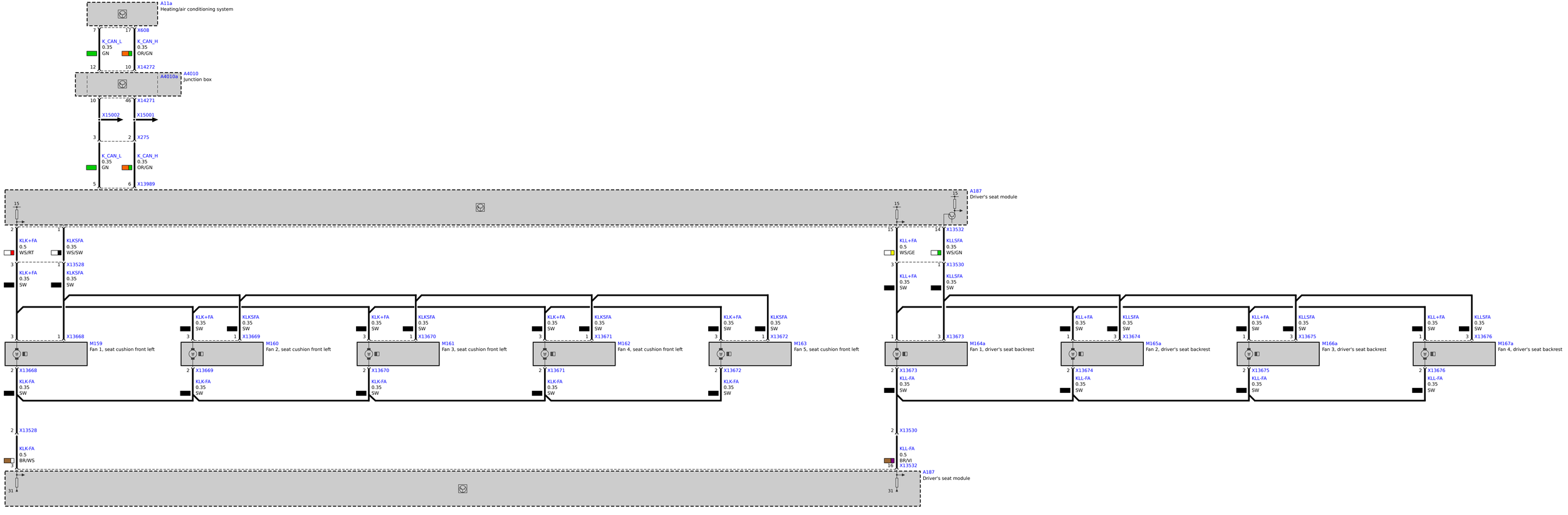
A11a
Heating/air conditioning system
7
17
X608
K_CAN_L
0.35
GN
K_CAN_H
0.35
OR/GN
12
10
X14272
A4010
Junction box
A4010a
10
46
X14271
X15002
X15001
3
2
X275
K_CAN_L
0.35
GN
K_CAN_H
0.35
OR/GN
5
6
X13989
A187
Driver's seat module
15
2
1
KLK+FA
0.5
WS/RT
KLKSFA
0.35
WS/SW
3
1
X13528
KLK+FA
0.35
SW
KLKSFA
0.35
SW
3
1
X13668
M159
Fan 1, seat cushion front left
2
X13668
KLK-FA
0.35
SW
KLK+FA
0.35
SW
KLKSFA
0.35
SW
3
1
X13669
M160
Fan 2, seat cushion front left
2
X13669
KLK-FA
0.35
SW
KLK+FA
0.35
SW
KLKSFA
0.35
SW
3
1
X13670
M161
Fan 3, seat cushion front left
2
X13670
KLK-FA
0.35
SW
KLK+FA
0.35
SW
KLKSFA
0.35
SW
3
1
X13671
M162
Fan 4, seat cushion front left
2
X13671
KLK-FA
0.35
SW
KLK+FA
0.35
SW
KLKSFA
0.35
SW
3
1
X13672
M163
Fan 5, seat cushion front left
2
X13672
KLK-FA
0.35
SW
2
X13528
KLK-FA
0.5
BR/WS
3
31
15
14
X13532
KLL+FA
0.5
WS/GE
KLLSFA
0.35
WS/GN
3
1
X13530
KLL+FA
0.35
SW
KLLSFA
0.35
SW
1
3
X13673
M164a
Fan 1, driver's seat backrest
2
X13673
KLL-FA
0.35
SW
KLL+FA
0.35
SW
KLLSFA
0.35
SW
1
3
X13674
M165a
Fan 2, driver's seat backrest
2
X13674
KLL-FA
0.35
SW
KLL+FA
0.35
SW
KLLSFA
0.35
SW
1
3
X13675
M166a
Fan 3, driver's seat backrest
2
X13675
KLL-FA
0.35
SW
KLL+FA
0.35
SW
KLLSFA
0.35
SW
1
3
X13676
M167a
Fan 4, driver's seat backrest
2
X13676
KLL-FA
0.35
SW
2
X13530
KLL-FA
0.5
BR/VI
16
X13532
A187
Driver's seat module
31