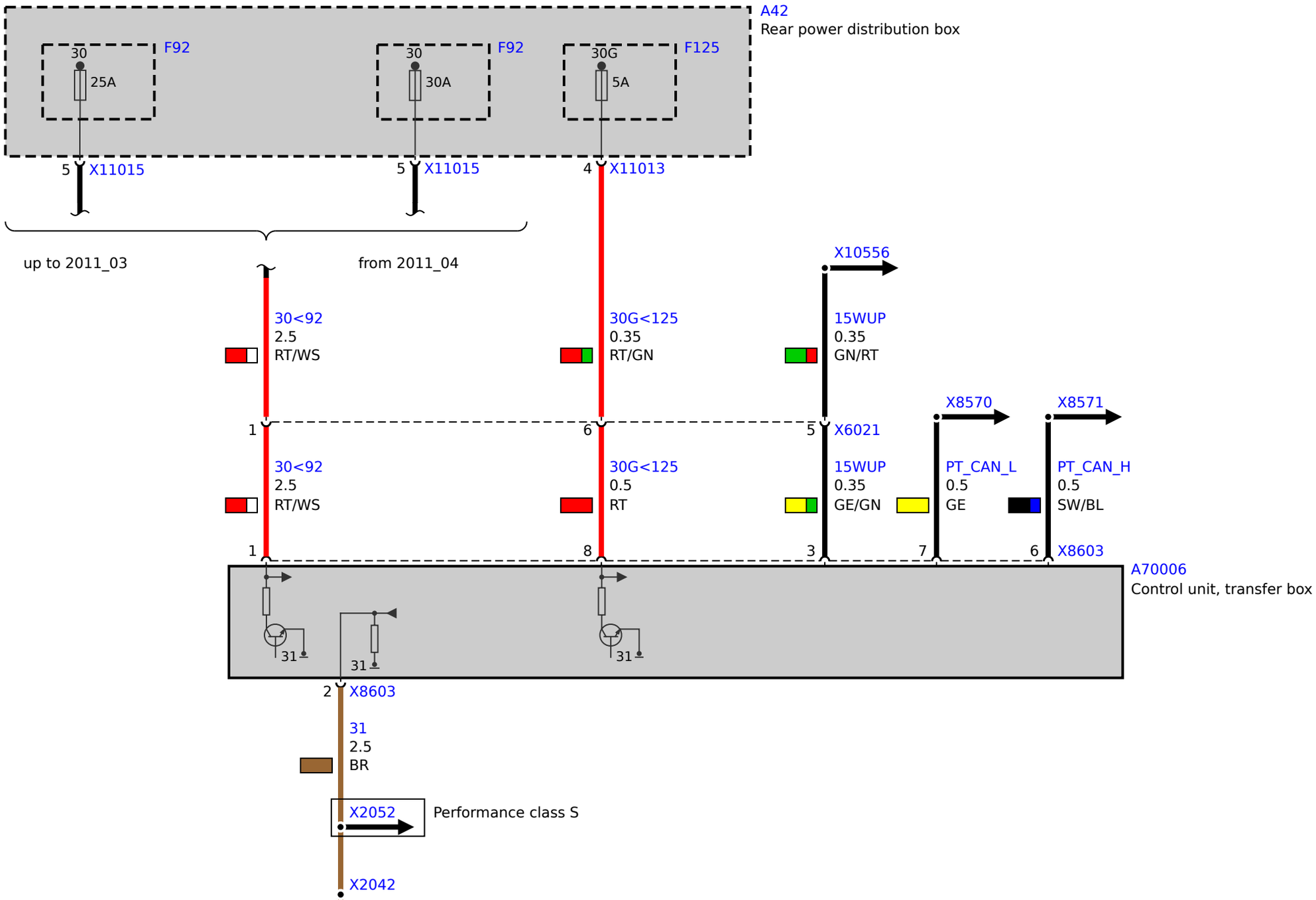
A42
Rear power distribution box
30
F92
25A
30
F92
30A
30G
F125
5A
5
X11015
5
X11015
4
X11013
up to 2011_03
from 2011_04
X10556
30<92
2.5
RT/WS
30G<125
0.35
RT/GN
15WUP
0.35
GN/RT
X8570
X8571
1
6
5
X6021
30<92
2.5
RT/WS
30G<125
0.5
RT
15WUP
0.35
GE/GN
PT_CAN_L
0.5
GE
PT_CAN_H
0.5
SW/BL
1
8
3
7
6
X8603
A70006
Control unit, transfer box
31
31
31
2
X8603
31
2.5
BR
X2052
Performance class S
X2042