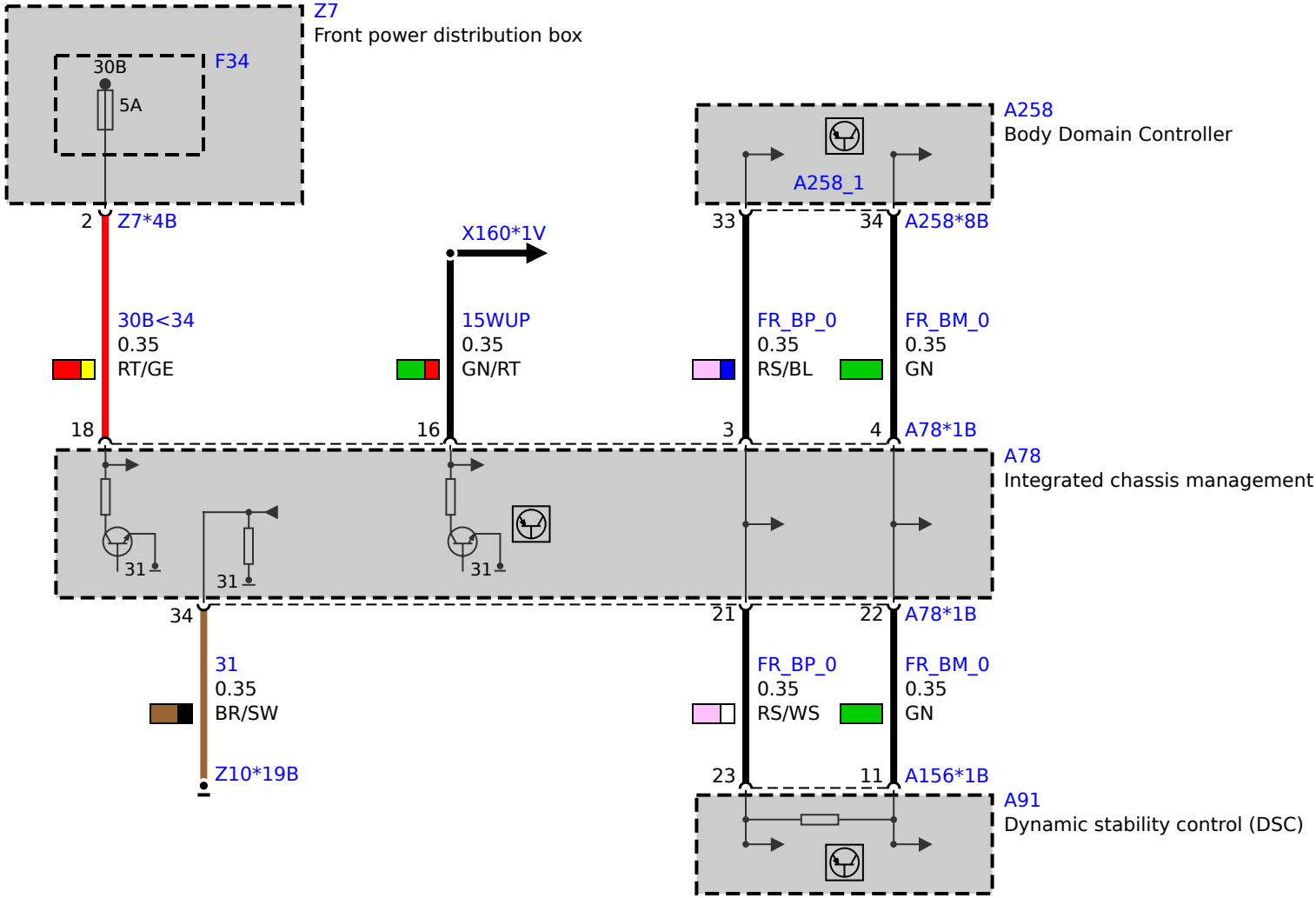
Z7
Front power distribution box
30B
F34
5A
A258
Body Domain Controller
A258_1
2
Z7*4B
X160*1V
33
34
A258*8B
30B<34
0.35
RT/GE
15WUP
0.35
GN/RT
FR_BP_0
0.35
RS/BL
FR_BM_0
0.35
GN
18
16
3
4
A78*1B
A78
Integrated chassis management
31
31
31
34
21
22
A78*1B
31
0.35
BR/SW
FR_BP_0
0.35
RS/WS
FR_BM_0
0.35
GN
Z10*19B
23
11
A156*1B
A91
Dynamic stability control (DSC)