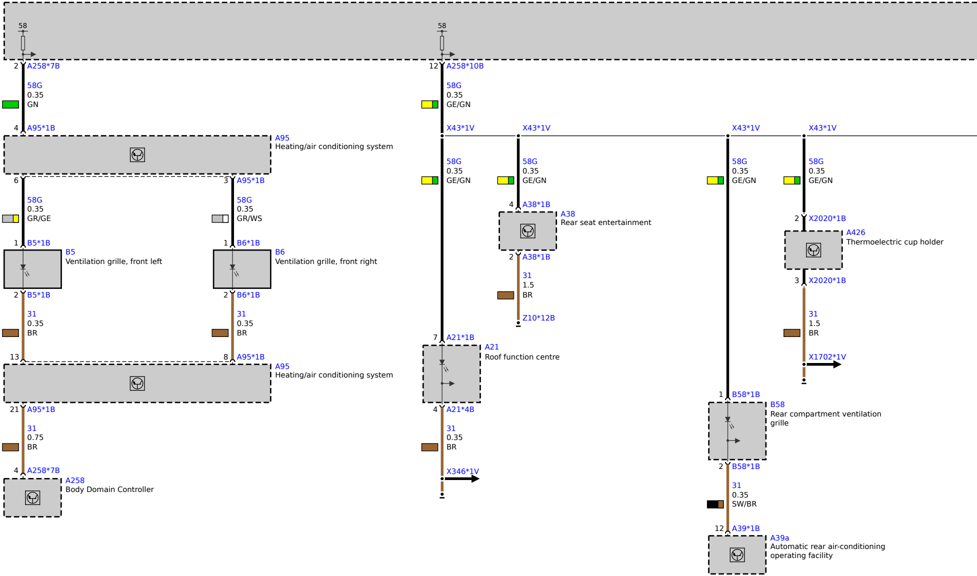
58
2 A258*7B
58G
0.35
GN
4 A95*1B
A95
Heating/air conditioning system
6
3 A95*1B
58G
0.35
GR/GE
58G
0.35
GR/WS
1 B5*1B
B5
Ventilation grille, front left
1 B6*1B
B6
Ventilation grille, front right
2 B5*1B
2 B6*1B
31
0.35
BR
31
0.35
BR
13
8 A95*1B
A95
Heating/air conditioning system
21 A95*1B
31
0.75
BR
4 A258*7B
A258
Body Domain Controller
58
12 A258*10B
58G
0.35
GE/GN
X43*1V
X43*1V
X43*1V
X43*1V
58G
0.35
GE/GN
58G
0.35
GE/GN
58G
0.35
GE/GN
58G
0.35
GE/GN
4 A38*1B
A38
Rear seat entertainment
2 A38*1B
31
1.5
BR
Z10*12B
2 X2020*1B
A426
Thermoelectric cup holder
3 X2020*1B
31
1.5
BR
X1702*1V
7 A21*1B
A21
Roof function centre
4 A21*4B
31
0.35
BR
X346*1V
1 B58*1B
B58
Rear compartment ventilation grille
2 B58*1B
31
0.35
SW/BR
12 A39*1B
A39a
Automatic rear air-conditioning operating facility

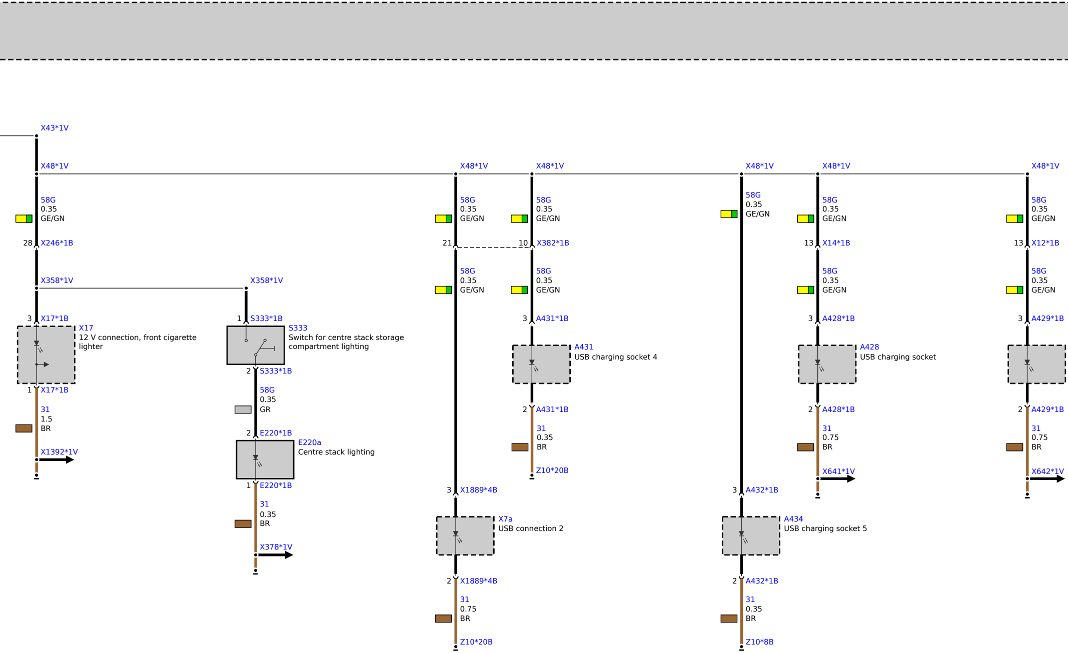
X43*1V
X48*1V
58G
0.35
GE/GN
28
X246*1B
X358*1V
X358*1V
3
X17*1B
X17
12 V connection, front cigarette lighter
1
X17*1B
31
1.5
BR
X1392*1V
1
S333*1B
S333
Switch for centre stack storage compartment lighting
2
S333*1B
58G
0.35
GR
2
E220*1B
E220a
Centre stack lighting
1
E220*1B
31
0.35
BR
X378*1V
X48*1V
58G
0.35
GE/GN
21
58G
0.35
GE/GN
3
X1889*4B
X7a
USB connection 2
2
X1889*4B
31
0.75
BR
Z10*20B
X48*1V
58G
0.35
GE/GN
10
X382*1B
58G
0.35
GE/GN
3
A431*1B
A431
USB charging socket 4
2
A431*1B
31
0.35
BR
Z10*20B
X48*1V
58G
0.35
GE/GN
3
A432*1B
A434
USB charging socket 5
2
A432*1B
31
0.35
BR
Z10*8B
X48*1V
58G
0.35
GE/GN
13
X14*1B
58G
0.35
GE/GN
3
A428*1B
A428
USB charging socket
2
A428*1B
31
0.75
BR
X641*1V
X48*1V
58G
0.35
GE/GN
13
X12*1B
58G
0.35
GE/GN
3
A429*1B
2
A429*1B
31
0.75
BR
X642*1V

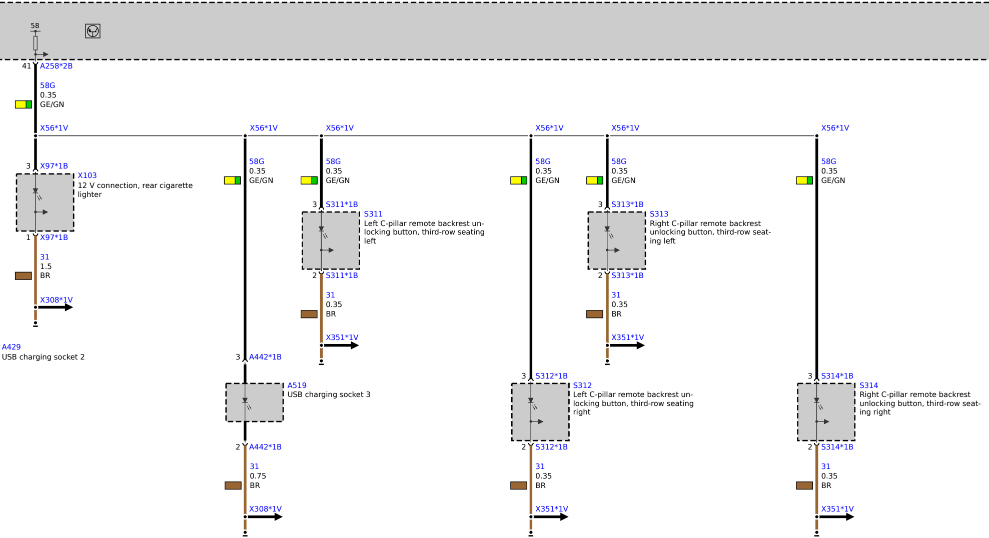
58
41
A258*2B
58G
0.35
GE/GN
X56*1V
3
X97*1B
X103
12 V connection, rear cigarette lighter
1
X97*1B
31
1.5
BR
X308*1V
A429
USB charging socket 2
X56*1V
58G
0.35
GE/GN
3
A442*1B
A519
USB charging socket 3
2
A442*1B
31
0.75
BR
X308*1V
X56*1V
58G
0.35
GE/GN
3
S311*1B
S311
Left C-pillar remote backrest unlocking button, third-row seating left
2
S311*1B
31
0.35
BR
X351*1V
X56*1V
58G
0.35
GE/GN
3
S312*1B
S312
Left C-pillar remote backrest unlocking button, third-row seating right
2
S312*1B
31
0.35
BR
X351*1V
X56*1V
58G
0.35
GE/GN
3
S313*1B
S313
Right C-pillar remote backrest unlocking button, third-row seating left
2
S313*1B
31
0.35
BR
X351*1V
X56*1V
58G
0.35
GE/GN
3
S314*1B
S314
Right C-pillar remote backrest unlocking button, third-row seating right
2
S314*1B
31
0.35
BR
X351*1V

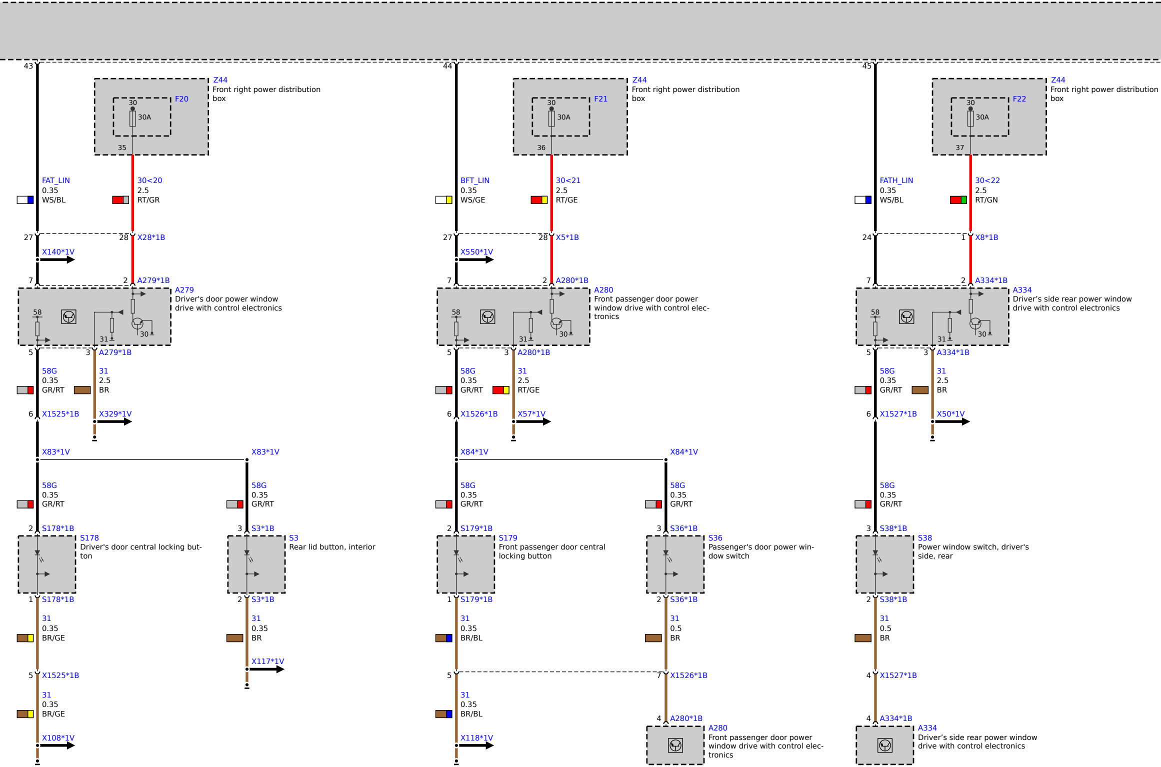
43
Z44
Front right power distribution box
F20
30
30A
35
FAT_LIN
0.35
WS/BL
30<20
2.5
RT/GR
27
28
X28*1B
X140*1V
7
2
A279*1B
A279
Driver's door power window drive with control electronics
58
31
30
5
3
A279*1B
58G
0.35
GR/RT
31
2.5
BR
6
X1525*1B
X329*1V
X83*1V
X83*1V
58G
0.35
GR/RT
58G
0.35
GR/RT
2
S178*1B
S178
Driver's door central locking button
3
S3*1B
S3
Rear lid button, interior
1
S178*1B
2
S3*1B
31
0.35
BR/GE
31
0.35
BR
X117*1V
5
X1525*1B
31
0.35
BR/GE
X108*1V
44
Z44
Front right power distribution box
F21
30
30A
36
BFT_LIN
0.35
WS/GE
30<21
2.5
RT/GE
27
28
X5*1B
X550*1V
7
2
A280*1B
A280
Front passenger door power window drive with control electronics
58
31
30
5
3
A280*1B
58G
0.35
GR/RT
31
2.5
RT/GE
6
X1526*1B
X57*1V
X84*1V
X84*1V
58G
0.35
GR/RT
58G
0.35
GR/RT
2
S179*1B
S179
Front passenger door central locking button
3
S36*1B
S36
Passenger's door power window switch
1
S179*1B
2
S36*1B
31
0.35
BR/BL
31
0.5
BR
5
7
X1526*1B
31
0.35
BR/BL
X118*1V
4
A280*1B
A280
Front passenger door power window drive with control electronics
45
Z44
Front right power distribution box
F22
30
30A
37
FATH_LIN
0.35
WS/BL
30<22
2.5
RT/GN
24
1
X8*1B
7
2
A334*1B
A334
Driver's side rear power window drive with control electronics
58
31
30
5
3
A334*1B
58G
0.35
GR/RT
31
2.5
BR
6
X1527*1B
X50*1V
58G
0.35
GR/RT
3
S38*1B
S38
Power window switch, driver's side, rear
2
S38*1B
31
0.5
BR
4
X1527*1B
4
A334*1B
A334
Driver's side rear power window drive with control electronics

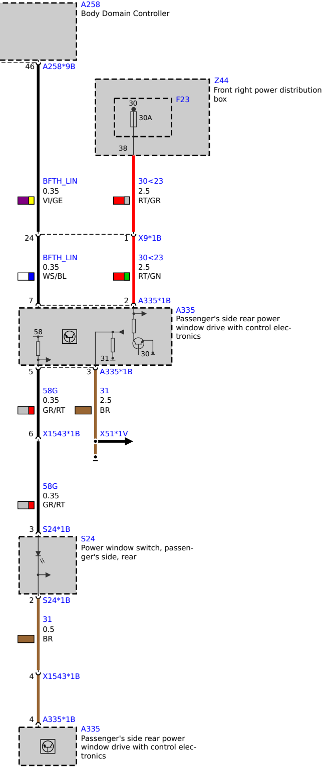
A258
Body Domain Controller
46
A258*9B
Z44
Front right power distribution box
F23
30
30A
38
BFTH_LIN
0.35
VI/GE
30<23
2.5
RT/GR
24
1
X9*1B
BFTH_LIN
0.35
WS/BL
30<23
2.5
RT/GN
7
2
A335*1B
A335
Passenger's side rear power window drive with control electronics
58
31
30
5
3
A335*1B
58G
0.35
GR/RT
31
2.5
BR
6
X1543*1B
X51*1V
58G
0.35
GR/RT
3
S24*1B
S24
Power window switch, passenger's side, rear
2
S24*1B
31
0.5
BR
4
X1543*1B
4
A335*1B
A335
Passenger's side rear power window drive with control electronics