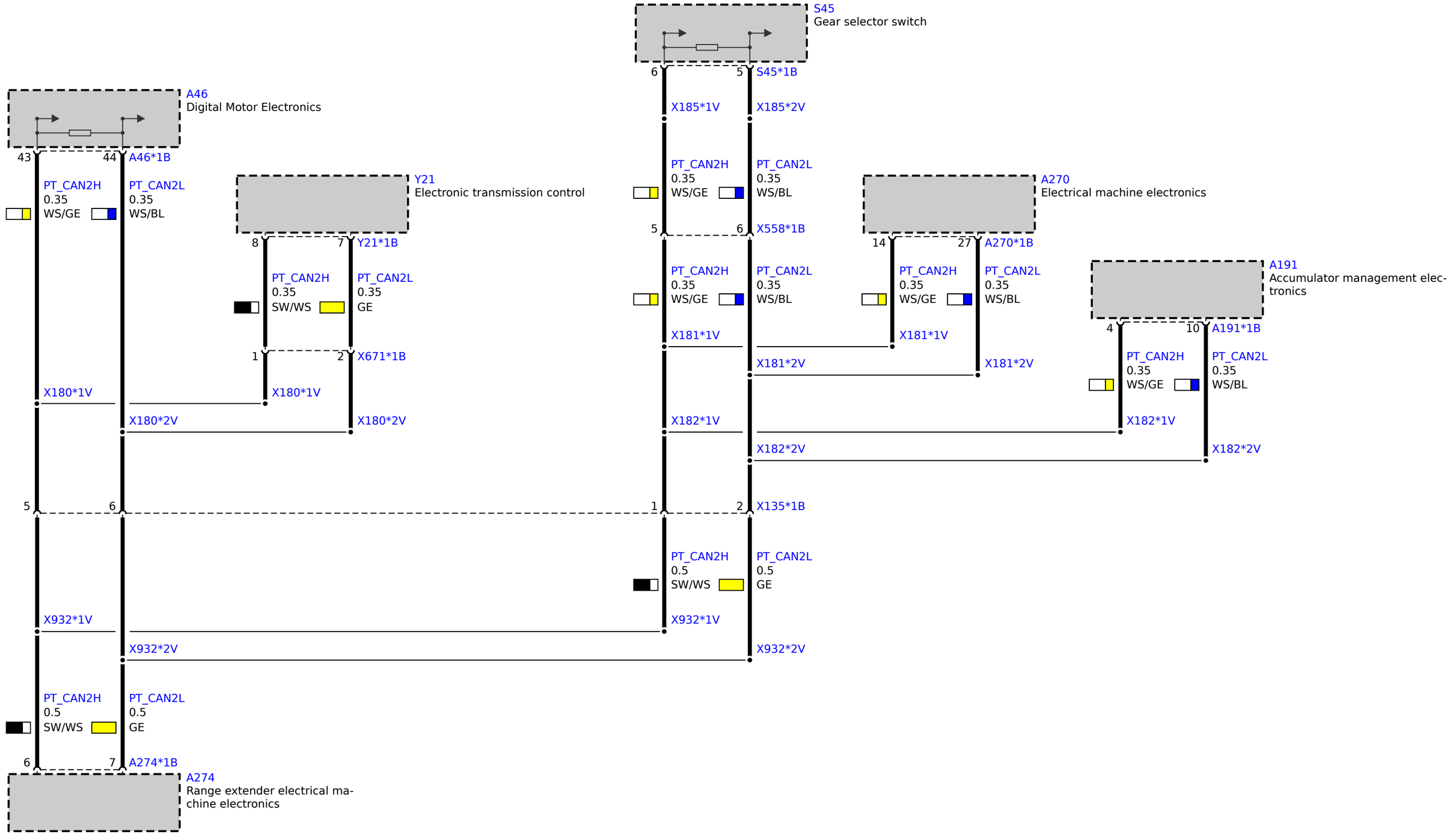
S45
Gear selector switch
6
5
S45*1B
X185*1V
X185*2V
PT_CAN2H
0.35
WS/GE
PT_CAN2L
0.35
WS/BL
5
6
X558*1B
A46
Digital Motor Electronics
43
44
A46*1B
PT_CAN2H
0.35
WS/GE
PT_CAN2L
0.35
WS/BL
Y21
Electronic transmission control
8
7
Y21*1B
PT_CAN2H
0.35
SW/WS
PT_CAN2L
0.35
GE
1
2
X671*1B
X180*1V
X180*1V
X180*2V
X180*2V
A270
Electrical machine electronics
14
27
A270*1B
PT_CAN2H
0.35
WS/GE
PT_CAN2L
0.35
WS/BL
PT_CAN2H
0.35
WS/GE
PT_CAN2L
0.35
WS/BL
X181*1V
X181*1V
X181*2V
X181*2V
A191
Accumulator management electronics
4
10
A191*1B
PT_CAN2H
0.35
WS/GE
PT_CAN2L
0.35
WS/BL
X182*1V
X182*1V
X182*2V
X182*2V
5
6
1
2
X135*1B
PT_CAN2H
0.5
SW/WS
PT_CAN2L
0.5
GE
X932*1V
X932*1V
X932*2V
X932*2V
PT_CAN2H
0.5
SW/WS
PT_CAN2L
0.5
GE
6
7
A274*1B
A274
Range extender electrical machine electronics