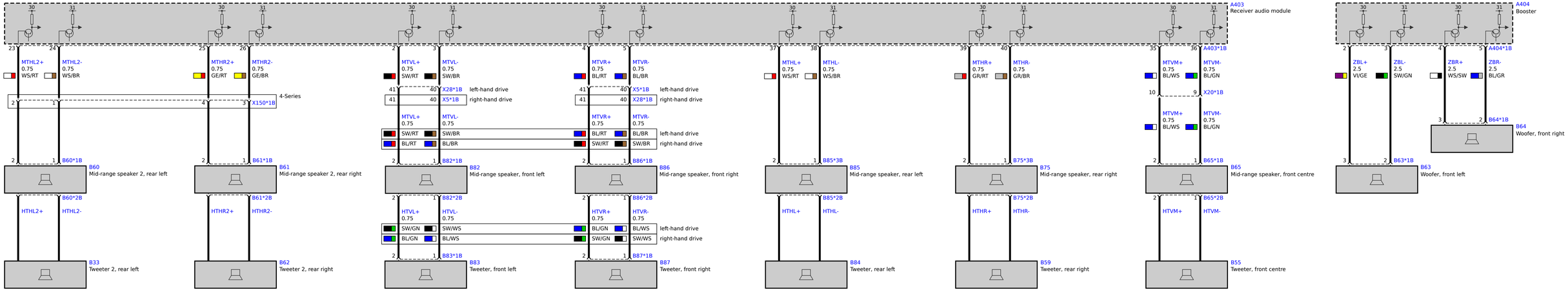
A403
Receiver audio module
A404
Booster
MTHL2+
0.75
WS/RT
MTHL2-
0.75
WS/BR
MTHR2+
0.75
GE/RT
MTHR2-
0.75
GE/BR
4-Series
X150*1B
B60*1B
B60
Mid-range speaker 2, rear left
B61*1B
B61
Mid-range speaker 2, rear right
B60*2B
HTHL2+
HTHL2-
B33
Tweeter 2, rear left
B61*2B
HTHR2+
HTHR2-
B62
Tweeter 2, rear right
MTVL+
0.75
SW/RT
MTVL-
0.75
SW/BR
X28*1B
left-hand drive
X5*1B
right-hand drive
BL/RT
BL/BR
B82*1B
B82
Mid-range speaker, front left
B82*2B
HTVL+
0.75
HTVL-
0.75
SW/GN
SW/WS
BL/GN
BL/WS
B83*1B
B83
Tweeter, front left
MTVR+
0.75
BL/RT
MTVR-
0.75
BL/BR
X5*1B
X28*1B
SW/BR
B86*1B
B86
Mid-range speaker, front right
B86*2B
HTVR+
0.75
HTVR-
0.75
B87*1B
B87
Tweeter, front right
MTHL+
0.75
WS/RT
MTHL-
0.75
WS/BR
B85*3B
B85
Mid-range speaker, rear left
B85*2B
HTHL+
HTHL-
B84
Tweeter, rear left
MTHR+
0.75
GR/RT
MTHR-
0.75
GR/BR
B75*3B
B75
Mid-range speaker, rear right
B75*2B
HTHR+
HTHR-
B59
Tweeter, rear right
MTVM+
0.75
BL/WS
MTVM-
0.75
BL/GN
X20*1B
B65*1B
B65
Mid-range speaker, front centre
B65*2B
HTVM+
HTVM-
B55
Tweeter, front centre
ZBL+
2.5
VI/GE
ZBL-
2.5
SW/GN
ZBR+
2.5
WS/SW
ZBR-
2.5
BL/GR
A404*1B
B64*1B
B64
Woofer, front right
B63*1B
B63
Woofer, front left