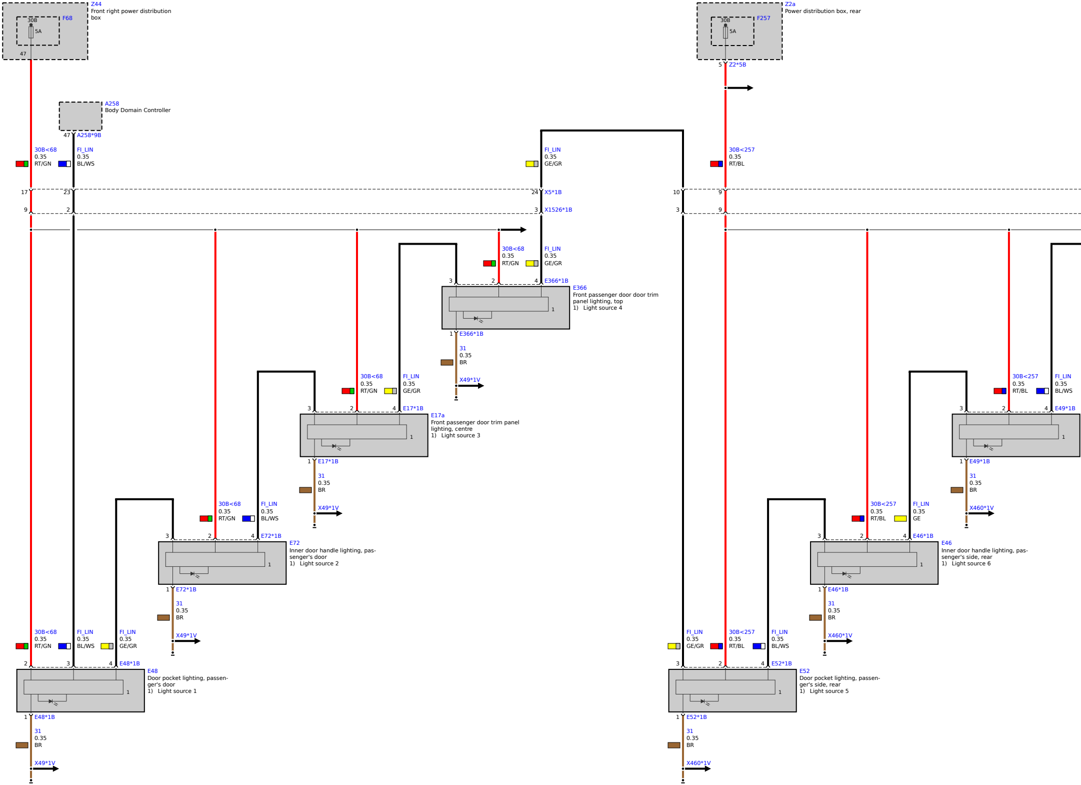
Z44
Front right power distribution box
F68
30B
5A
47
A258
Body Domain Controller
47
A258*9B
30B<68
0.35
RT/GN
FI_LIN
0.35
BL/WS
17
23
9
2
FI_LIN
0.35
GE/GR
24
X5*1B
3
X1526*1B
10
3
Z2a
Power distribution box, rear
F257
30B
5A
5
Z2*5B
30B<257
0.35
RT/BL
9
9
30B<68
0.35
RT/GN
FI_LIN
0.35
GE/GR
3
2
4
E366*1B
E366
Front passenger door door trim panel lighting, top
1) Light source 4
1
1
E366*1B
31
0.35
BR
X49*1V
30B<68
0.35
RT/GN
FI_LIN
0.35
GE/GR
3
2
4
E17*1B
E17a
Front passenger door trim panel lighting, centre
1) Light source 3
1
1
E17*1B
31
0.35
BR
X49*1V
30B<68
0.35
RT/GN
FI_LIN
0.35
BL/WS
3
2
4
E72*1B
E72
Inner door handle lighting, passenger's door
1) Light source 2
1
1
E72*1B
31
0.35
BR
X49*1V
30B<68
0.35
RT/GN
FI_LIN
0.35
BL/WS
FI_LIN
0.35
GE/GR
2
3
4
E48*1B
E48
Door pocket lighting, passenger's door
1) Light source 1
1
1
E48*1B
31
0.35
BR
X49*1V
30B<257
0.35
RT/BL
FI_LIN
0.35
BL/WS
3
2
4
E49*1B
1
1
E49*1B
31
0.35
BR
X460*1V
30B<257
0.35
RT/BL
FI_LIN
0.35
GE
3
2
4
E46*1B
E46
Inner door handle lighting, passenger's side, rear
1) Light source 6
1
1
E46*1B
31
0.35
BR
X460*1V
FI_LIN
0.35
GE/GR
30B<257
0.35
RT/BL
FI_LIN
0.35
BL/WS
3
2
4
E52*1B
E52
Door pocket lighting, passenger's side, rear
1) Light source 5
1
1
E52*1B
31
0.35
BR
X460*1V

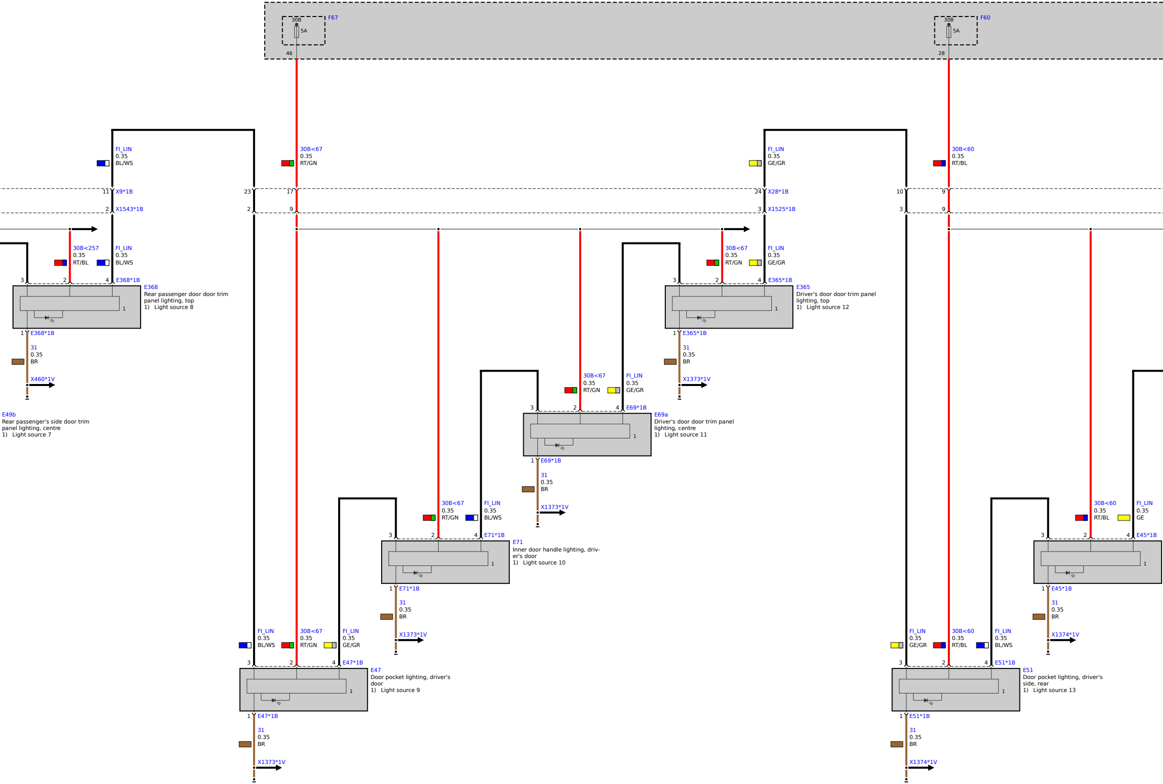
30B
5A
F67
46
30B
5A
F60
28
FI_LIN
0.35
BL/WS
30B<67
0.35
RT/GN
FI_LIN
0.35
GE/GR
30B<60
0.35
RT/BL
11
X9*1B
23
17
24
X28*1B
10
9
2
X1543*1B
2
9
3
X1525*1B
3
9
30B<257
0.35
RT/BL
FI_LIN
0.35
BL/WS
30B<67
0.35
RT/GN
FI_LIN
0.35
GE/GR
3
2
4
E368*1B
E368
Rear passenger door door trim panel lighting, top
1) Light source 8
1
3
2
4
E365*1B
E365
Driver's door door trim panel lighting, top
1) Light source 12
1
1
E368*1B
31
0.35
BR
X460*1V
1
E365*1B
31
0.35
BR
X1373*1V
E49b
Rear passenger's side door trim panel lighting, centre
1) Light source 7
30B<67
0.35
RT/GN
FI_LIN
0.35
GE/GR
3
2
4
E69*1B
E69a
Driver's door door trim panel lighting, centre
1) Light source 11
1
1
E69*1B
31
0.35
BR
X1373*1V
30B<67
0.35
RT/GN
FI_LIN
0.35
BL/WS
3
2
4
E71*1B
E71
Inner door handle lighting, driver's door
1) Light source 10
1
1
E71*1B
31
0.35
BR
X1373*1V
30B<60
0.35
RT/BL
FI_LIN
0.35
GE
3
2
4
E45*1B
1
1
E45*1B
31
0.35
BR
X1374*1V
FI_LIN
0.35
BL/WS
30B<67
0.35
RT/GN
FI_LIN
0.35
GE/GR
3
2
4
E47*1B
E47
Door pocket lighting, driver's door
1) Light source 9
1
1
E47*1B
31
0.35
BR
X1373*1V
FI_LIN
0.35
GE/GR
30B<60
0.35
RT/BL
FI_LIN
0.35
BL/WS
3
2
4
E51*1B
E51
Door pocket lighting, driver's side, rear
1) Light source 13
1
1
E51*1B
31
0.35
BR
X1374*1V

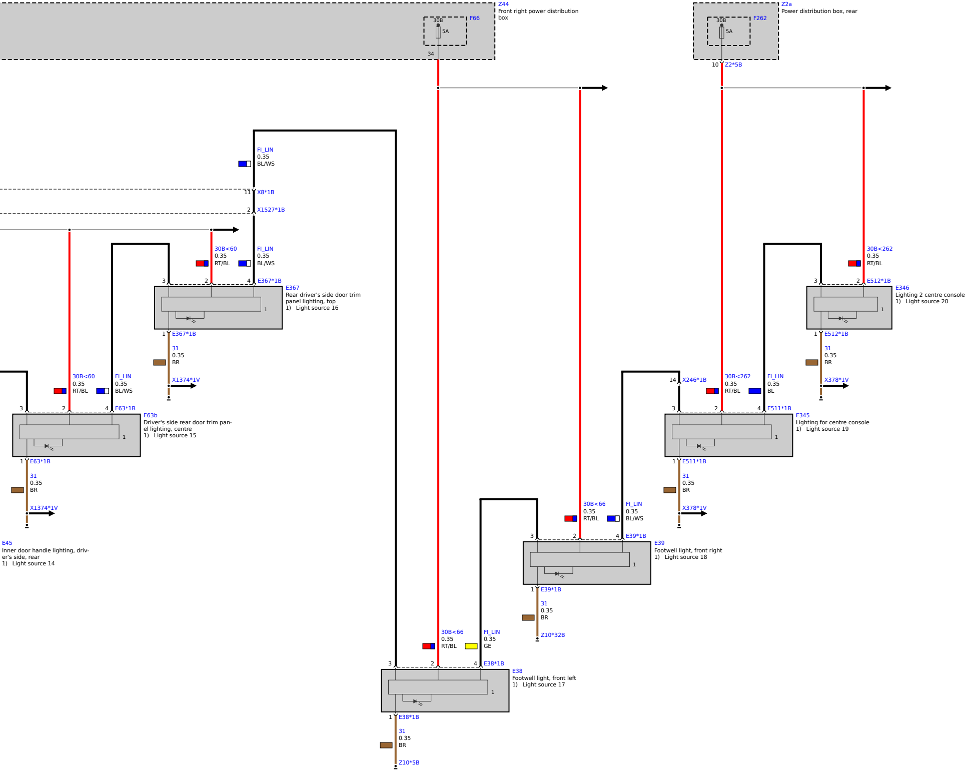
Z44
Front right power distribution box
F66
30B
5A
34
Z2a
Power distribution box, rear
F262
30B
5A
10
Z2*5B
FI_LIN
0.35
BL/WS
11
X8*1B
2
X1527*1B
30B<60
0.35
RT/BL
FI_LIN
0.35
BL/WS
3
2
4
E367*1B
E367
Rear driver's side door trim panel lighting, top
1) Light source 16
1
1
E367*1B
31
0.35
BR
X1374*1V
30B<262
0.35
RT/BL
3
2
E512*1B
E346
Lighting 2 centre console
1) Light source 20
1
1
E512*1B
31
0.35
BR
X378*1V
30B<60
0.35
RT/BL
FI_LIN
0.35
BL/WS
3
2
4
E63*1B
E63b
Driver's side rear door trim panel lighting, centre
1) Light source 15
1
1
E63*1B
31
0.35
BR
X1374*1V
E45
Inner door handle lighting, driver's side, rear
1) Light source 14
14
X246*1B
30B<262
0.35
RT/BL
FI_LIN
0.35
BL
3
2
4
E511*1B
E345
Lighting for centre console
1) Light source 19
1
1
E511*1B
31
0.35
BR
X378*1V
30B<66
0.35
RT/BL
FI_LIN
0.35
BL/WS
3
2
4
E39*1B
E39
Footwell light, front right
1) Light source 18
1
1
E39*1B
31
0.35
BR
Z10*32B
30B<66
0.35
RT/BL
FI_LIN
0.35
GE
3
2
4
E38*1B
E38
Footwell light, front left
1) Light source 17
1
1
E38*1B
31
0.35
BR
Z10*5B

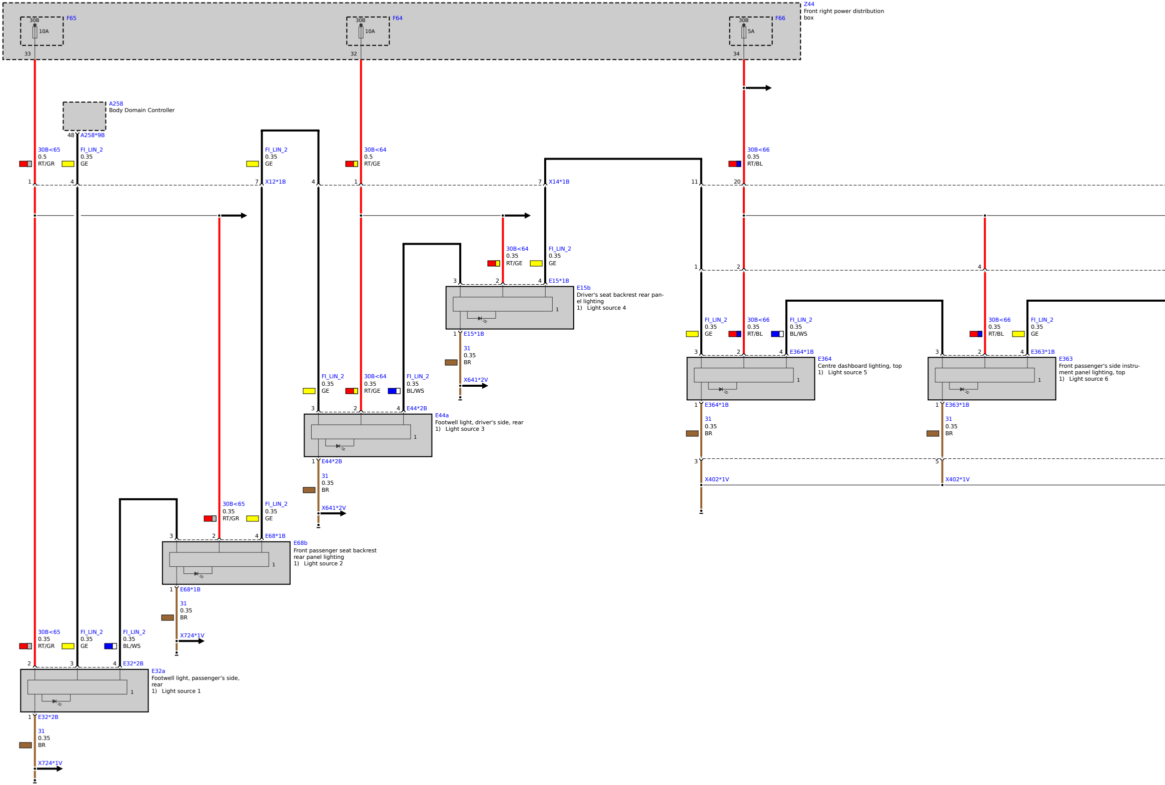
Z44
Front right power distribution box
F65
30B
10A
33
F64
30B
10A
32
F66
30B
5A
34
A258
Body Domain Controller
48
A258*9B
30B<65
0.5
RT/GR
FI_LIN_2
0.35
GE
FI_LIN_2
0.35
GE
30B<64
0.5
RT/GE
30B<66
0.35
RT/BL
1
4
7
X12*1B
4
1
7
X14*1B
11
20
30B<64
0.35
RT/GE
FI_LIN_2
0.35
GE
3
2
4
E15*1B
E15b
Driver's seat backrest rear panel lighting
1) Light source 4
1
1
E15*1B
31
0.35
BR
X641*2V
1
2
4
FI_LIN_2
0.35
GE
30B<66
0.35
RT/BL
FI_LIN_2
0.35
BL/WS
3
2
4
E364*1B
E364
Centre dashboard lighting, top
1) Light source 5
1
1
E364*1B
31
0.35
BR
30B<66
0.35
RT/BL
FI_LIN_2
0.35
GE
3
2
4
E363*1B
E363
Front passenger's side instrument panel lighting, top
1) Light source 6
1
1
E363*1B
31
0.35
BR
3
5
X402*1V
X402*1V
FI_LIN_2
0.35
GE
30B<64
0.35
RT/GE
FI_LIN_2
0.35
BL/WS
3
2
4
E44*2B
E44a
Footwell light, driver's side, rear
1) Light source 3
1
1
E44*2B
31
0.35
BR
X641*2V
30B<65
0.35
RT/GR
FI_LIN_2
0.35
GE
3
2
4
E68*1B
E68b
Front passenger seat backrest rear panel lighting
1) Light source 2
1
1
E68*1B
31
0.35
BR
X724*1V
30B<65
0.35
RT/GR
FI_LIN_2
0.35
GE
FI_LIN_2
0.35
BL/WS
2
3
4
E32*2B
E32a
Footwell light, passenger's side, rear
1) Light source 1
1
1
E32*2B
31
0.35
BR
X724*1V

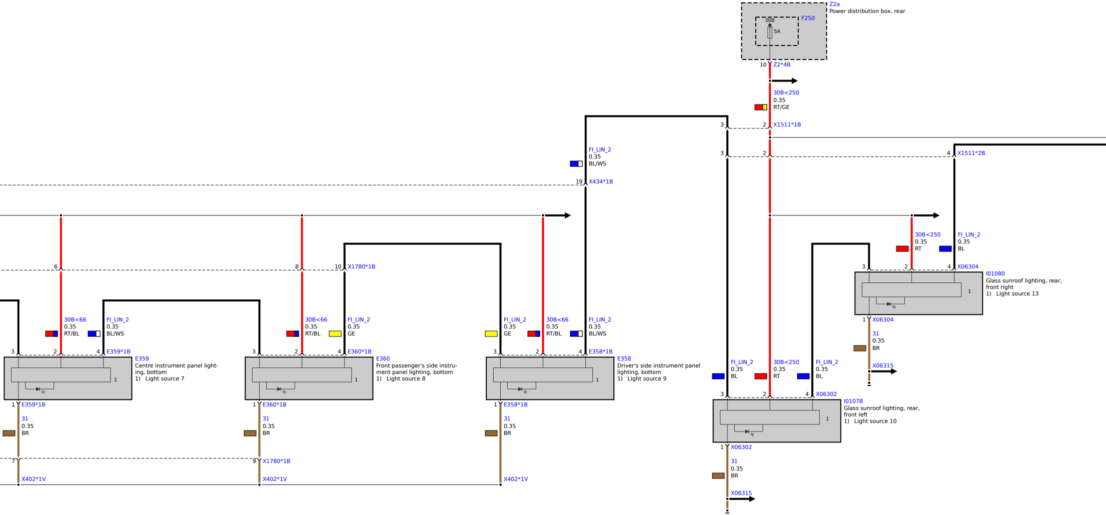
Z2a
Power distribution box, rear
F250
30B
5A
10
Z2*4B
30B<250
0.35
RT/GE
3
2
X1511*1B
3
2
4
X1511*2B
FI_LIN_2
0.35
BL/WS
19
X434*1B
30B<250
0.35
RT
FI_LIN_2
0.35
BL
3
2
4
X06304
I01080
Glass sunroof lighting, rear, front right
1) Light source 13
1
1
X06304
31
0.35
BR
X06315
6
8
10
X1780*1B
30B<66
0.35
RT/BL
FI_LIN_2
0.35
BL/WS
30B<66
0.35
RT/BL
FI_LIN_2
0.35
GE
FI_LIN_2
0.35
GE
30B<66
0.35
RT/BL
FI_LIN_2
0.35
BL/WS
3
2
4
E359*1B
E359
Centre instrument panel lighting, bottom
1) Light source 7
1
3
2
4
E360*1B
E360
Front passenger's side instrument panel lighting, bottom
1) Light source 8
1
3
2
4
E358*1B
E358
Driver's side instrument panel lighting, bottom
1) Light source 9
1
FI_LIN_2
0.35
BL
30B<250
0.35
RT
FI_LIN_2
0.35
BL
3
2
4
X06302
I01078
Glass sunroof lighting, rear, front left
1) Light source 10
1
1
E359*1B
31
0.35
BR
1
E360*1B
31
0.35
BR
1
E358*1B
31
0.35
BR
7
9
X1780*1B
X402*1V
X402*1V
X402*1V
1
X06302
31
0.35
BR
X06315

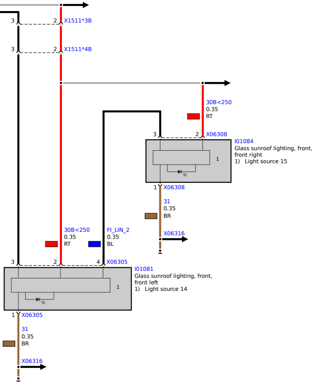
3
2
X1511*3B
3
2
X1511*4B
30B<250
0.35
RT
3
2
X06308
I01084
Glass sunroof lighting, front, front right
1) Light source 15
1
1
X06308
31
0.35
BR
X06316
30B<250
0.35
RT
FI_LIN_2
0.35
BL
3
2
4
X06305
I01081
Glass sunroof lighting, front, front left
1) Light source 14
1
1
X06305
31
0.35
BR
X06316