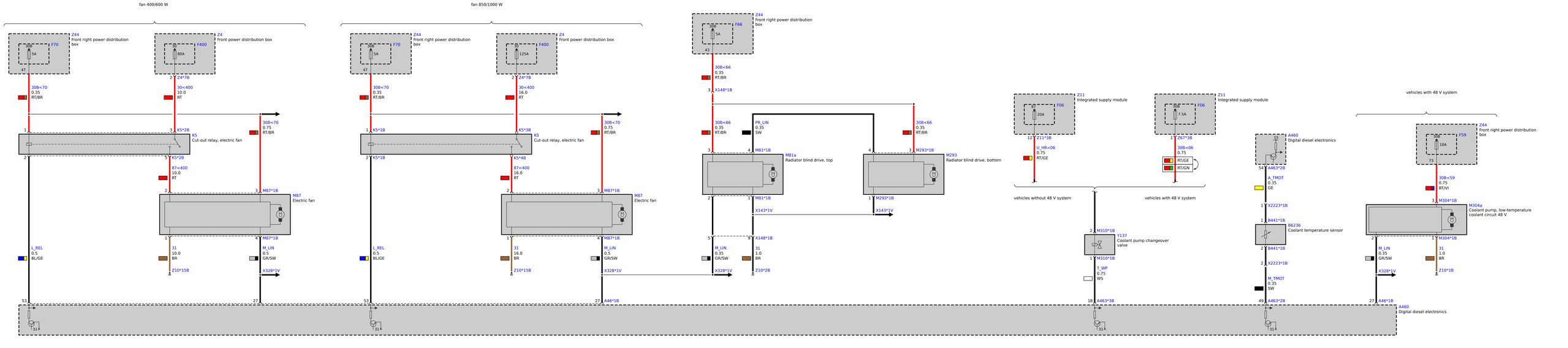
fan 400/600 W
Z44
Front right power distribution box
F70
5A
47
30B<70
0.35
RT/BR
Z4
Front power distribution box
F400
80A
2
Z4*7B
30<400
10.0
RT
30B<70
0.75
RT/BR
1
3
K5*2B
K5
Cut-out relay, electric fan
2
5
K5*2B
87<400
10.0
RT
2
3
M87*1B
M87
Electric fan
1
4
M87*1B
L_REL
0.5
BL/GE
31
10.0
BR
Z10*15B
M_LIN
0.5
GR/SW
X328*1V
53
27
31
fan 850/1000 W
Z44
Front right power distribution box
F70
5A
47
30B<70
0.35
RT/BR
Z4
Front power distribution box
F400
125A
2
Z4*7B
30<400
16.0
RT
30B<70
0.75
RT/BR
1
3
K5*1B
K5*3B
K5
Cut-out relay, electric fan
2
5
K5*1B
K5*4B
87<400
16.0
RT
2
3
M87*1B
M87
Electric fan
1
4
M87*1B
L_REL
0.5
BL/GE
31
16.0
BR
Z10*15B
M_LIN
0.5
GR/SW
X328*1V
A46*1B
53
27
31
Z44
Front right power distribution box
F66
5A
43
30B<66
0.35
RT/BR
3
X148*1B
30B<66
0.35
RT/BR
PR_LIN
0.35
SW
30B<66
0.35
RT/BR
3
4
M81*1B
M81a
Radiator blind drive, top
4
3
M293*1B
M293
Radiator blind drive, bottom
2
1
M81*1B
X143*1V
1
M293*1B
X143*1V
5
6
X148*1B
M_LIN
0.35
GR/SW
31
1.0
BR
Z10*2B
X328*1V
Z11
Integrated supply module
F06
20A
12
Z11*3B
U_HR<06
0.75
RT/GE
vehicles without 48 V system
Z11
Integrated supply module
F06
7.5A
1
Z67*3B
30B<06
0.75
RT/GE
RT/GN
vehicles with 48 V system
2
M310*1B
Y137
Coolant pump changeover valve
1
M310*1B
T_WP
0.75
WS
18
A463*3B
31
A460
Digital diesel electronics
15
54
A463*2B
A_TMOT
0.35
GE
1
X2223*1B
1
B441*1B
B6236
Coolant temperature sensor
2
B441*1B
2
X2223*1B
M_TMOT
0.35
SW
49
A463*2B
31
vehicles with 48 V system
Z44
Front right power distribution box
F59
10A
73
30B<59
0.75
RT/VI
3
M304*1B
M304a
Coolant pump, low-temperature coolant circuit 48 V
2
1
M304*1B
M_LIN
0.35
GR/SW
31
1.0
BR
Z10*1B
X328*1V
27
A46*1B
A460
Digital diesel electronics
31