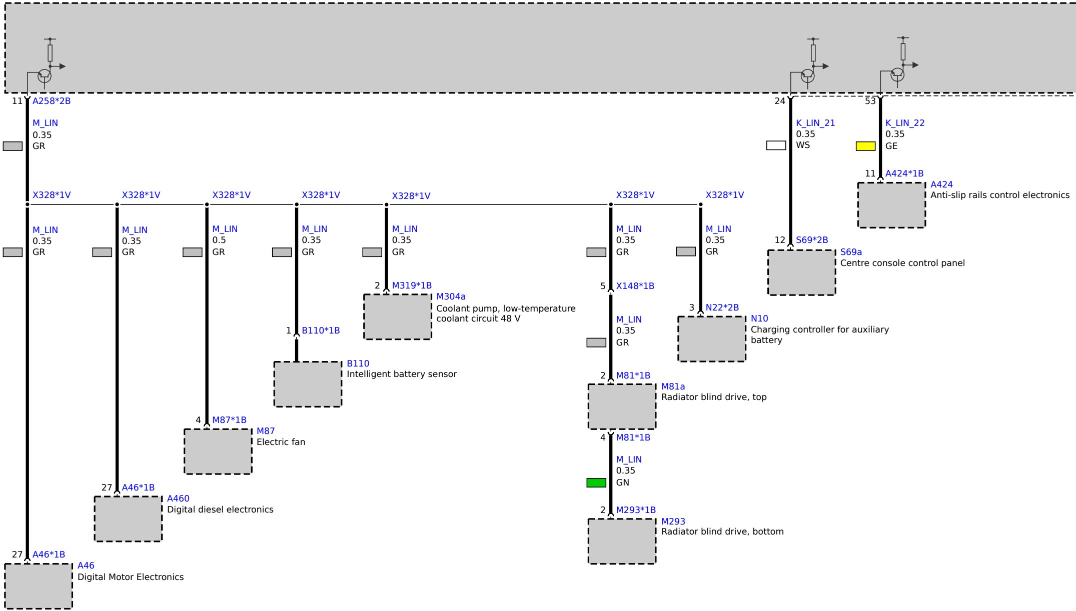
11 A258*2B
M_LIN
0.35
GR
X328*1V
M_LIN
0.35
GR
27 A46*1B
A46
Digital Motor Electronics
X328*1V
M_LIN
0.35
GR
27 A46*1B
A460
Digital diesel electronics
X328*1V
M_LIN
0.5
GR
4 M87*1B
M87
Electric fan
X328*1V
M_LIN
0.35
GR
1 B110*1B
B110
Intelligent battery sensor
X328*1V
M_LIN
0.35
GR
2 M319*1B
M304a
Coolant pump, low-temperature coolant circuit 48 V
X328*1V
M_LIN
0.35
GR
5 X148*1B
M_LIN
0.35
GR
2 M81*1B
M81a
Radiator blind drive, top
4 M81*1B
M_LIN
0.35
GN
2 M293*1B
M293
Radiator blind drive, bottom
X328*1V
M_LIN
0.35
GR
3 N22*2B
N10
Charging controller for auxiliary battery
24
K_LIN_21
0.35
WS
12 S69*2B
S69a
Centre console control panel
53
K_LIN_22
0.35
GE
11 A424*1B
A424
Anti-slip rails control electronics

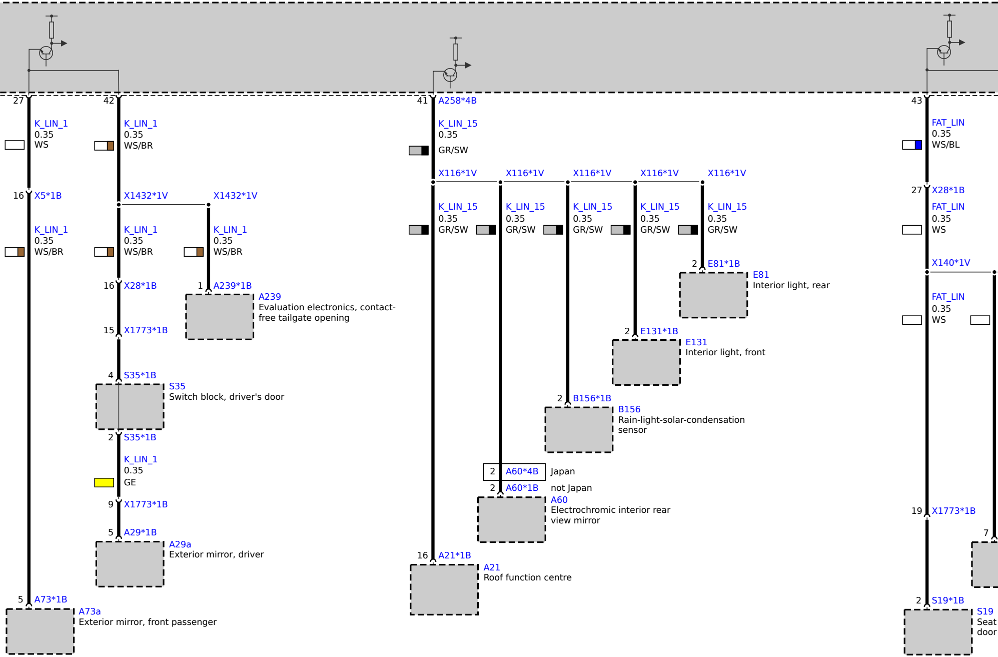
27
K_LIN_1
0.35
WS
16
X5*1B
K_LIN_1
0.35
WS/BR
5
A73*1B
A73a
Exterior mirror, front passenger
42
K_LIN_1
0.35
WS/BR
X1432*1V
K_LIN_1
0.35
WS/BR
16
X28*1B
15
X1773*1B
4
S35*1B
S35
Switch block, driver's door
2
S35*1B
K_LIN_1
0.35
GE
9
X1773*1B
5
A29*1B
A29a
Exterior mirror, driver
X1432*1V
K_LIN_1
0.35
WS/BR
1
A239*1B
A239
Evaluation electronics, contact-free tailgate opening
41
A258*4B
K_LIN_15
0.35
GR/SW
X116*1V
X116*1V
X116*1V
X116*1V
X116*1V
K_LIN_15
0.35
GR/SW
K_LIN_15
0.35
GR/SW
K_LIN_15
0.35
GR/SW
K_LIN_15
0.35
GR/SW
K_LIN_15
0.35
GR/SW
2
E81*1B
E81
Interior light, rear
2
E131*1B
E131
Interior light, front
2
B156*1B
B156
Rain-light-solar-condensation sensor
2
A60*4B
Japan
2
A60*1B
not Japan
A60
Electrochromic interior rear view mirror
16
A21*1B
A21
Roof function centre
43
FAT_LIN
0.35
WS/BL
27
X28*1B
FAT_LIN
0.35
WS
X140*1V
FAT_LIN
0.35
WS
19
X1773*1B
7
2
S19*1B
S19
Seat
door

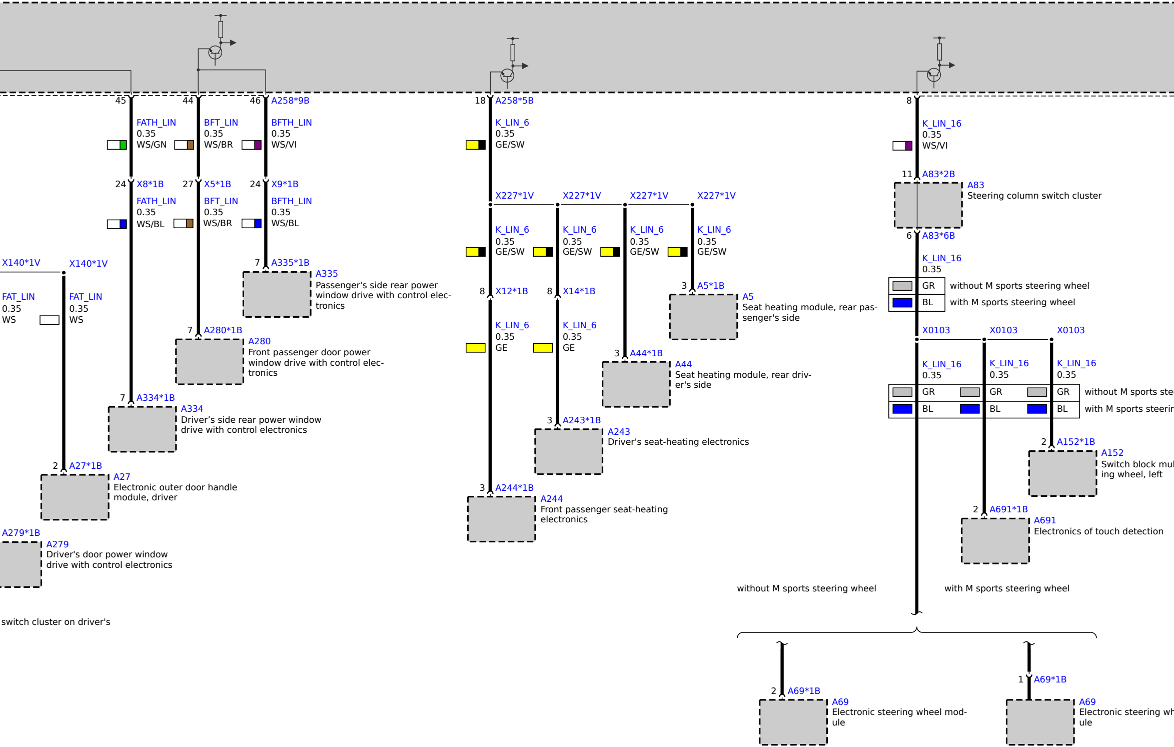
45
44
46
A258*9B
FATH_LIN
0.35
WS/GN
BFT_LIN
0.35
WS/BR
BFTH_LIN
0.35
WS/VI
24
X8*1B
27
X5*1B
24
X9*1B
FATH_LIN
0.35
WS/BL
BFT_LIN
0.35
WS/BR
BFTH_LIN
0.35
WS/BL
X140*1V
X140*1V
FAT_LIN
0.35
WS
FAT_LIN
0.35
WS
7
A335*1B
A335
Passenger's side rear power window drive with control electronics
7
A280*1B
A280
Front passenger door power window drive with control electronics
7
A334*1B
A334
Driver's side rear power window drive with control electronics
2
A27*1B
A27
Electronic outer door handle module, driver
A279*1B
A279
Driver's door power window drive with control electronics
switch cluster on driver's
18
A258*5B
K_LIN_6
0.35
GE/SW
X227*1V
X227*1V
X227*1V
X227*1V
K_LIN_6
0.35
GE/SW
K_LIN_6
0.35
GE/SW
K_LIN_6
0.35
GE/SW
K_LIN_6
0.35
GE/SW
8
X12*1B
8
X14*1B
K_LIN_6
0.35
GE
K_LIN_6
0.35
GE
3
A5*1B
A5
Seat heating module, rear passenger's side
3
A44*1B
A44
Seat heating module, rear driver's side
3
A243*1B
A243
Driver's seat-heating electronics
3
A244*1B
A244
Front passenger seat-heating electronics
8
K_LIN_16
0.35
WS/VI
11
A83*2B
A83
Steering column switch cluster
6
A83*6B
K_LIN_16
0.35
GR
without M sports steering wheel
BL
with M sports steering wheel
X0103
X0103
X0103
K_LIN_16
0.35
K_LIN_16
0.35
K_LIN_16
0.35
GR
GR
GR
without M sports ste
BL
BL
BL
with M sports steerin
2
A152*1B
A152
Switch block mul
ing wheel, left
2
A691*1B
A691
Electronics of touch detection
without M sports steering wheel
with M sports steering wheel
2
A69*1B
A69
Electronic steering wheel module
1
A69*1B
A69
Electronic steering wh
ule

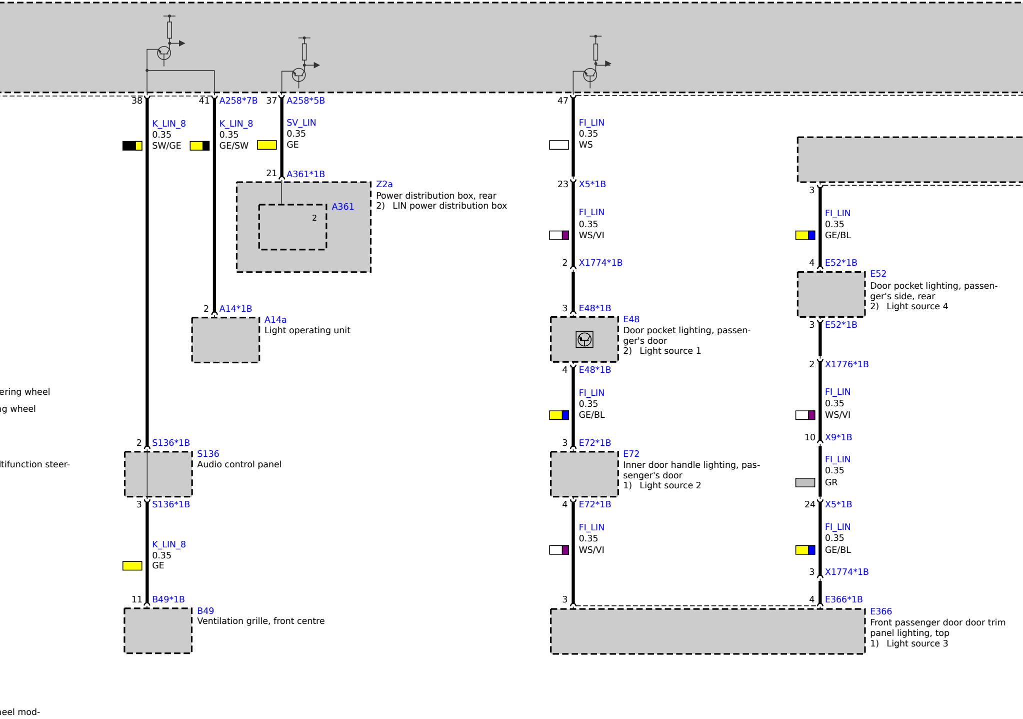
38
41
A258*7B
37
A258*5B
47
K_LIN_8
0.35
SW/GE
K_LIN_8
0.35
GE/SW
SV_LIN
0.35
GE
FI_LIN
0.35
WS
21
A361*1B
Z2a
Power distribution box, rear
2) LIN power distribution box
A361
2
23
X5*1B
FI_LIN
0.35
WS/VI
2
X1774*1B
3
FI_LIN
0.35
GE/BL
4
E52*1B
E52
Door pocket lighting, passenger's side, rear
2) Light source 4
3
E52*1B
2
A14*1B
A14a
Light operating unit
3
E48*1B
E48
Door pocket lighting, passenger's door
2) Light source 1
4
E48*1B
FI_LIN
0.35
GE/BL
2
X1776*1B
FI_LIN
0.35
WS/VI
ering wheel
g wheel
10
X9*1B
2
S136*1B
S136
Audio control panel
3
E72*1B
E72
Inner door handle lighting, passenger's door
1) Light source 2
ltifunction steer-
FI_LIN
0.35
GR
3
S136*1B
4
E72*1B
24
X5*1B
K_LIN_8
0.35
GE
FI_LIN
0.35
WS/VI
FI_LIN
0.35
GE/BL
3
X1774*1B
11
B49*1B
B49
Ventilation grille, front centre
3
4
E366*1B
E366
Front passenger door door trim panel lighting, top
1) Light source 3
eel mod-

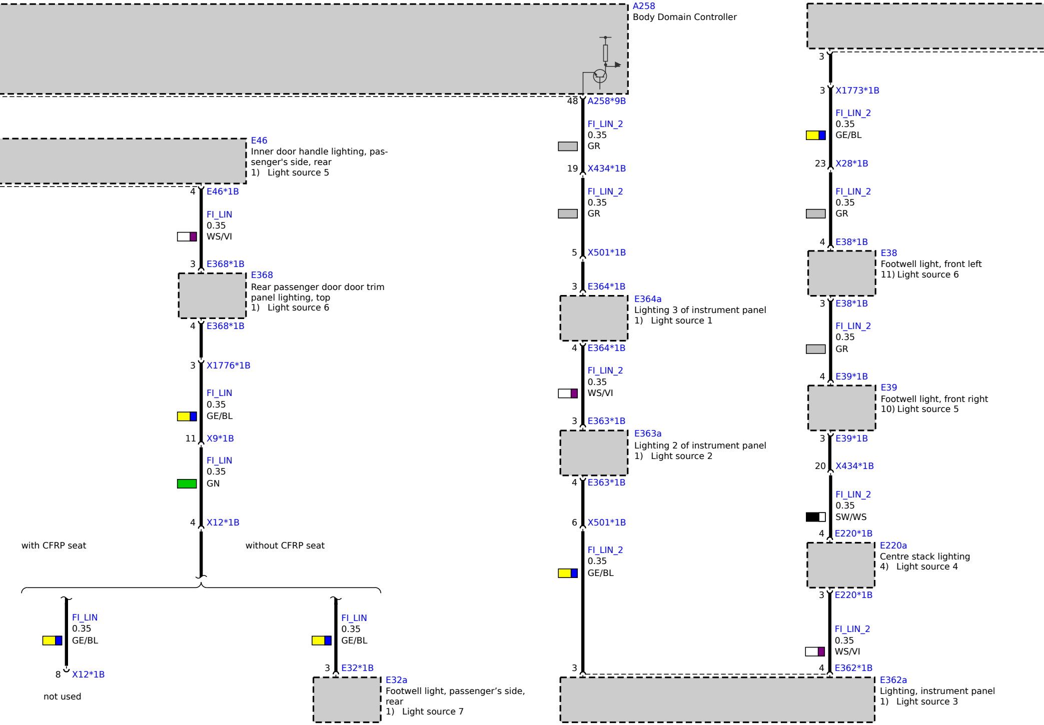
A258
Body Domain Controller
48
A258*9B
FI_LIN_2
0.35
GR
19
X434*1B
FI_LIN_2
0.35
GR
5
X501*1B
3
E364*1B
E364a
Lighting 3 of instrument panel
1) Light source 1
4
E364*1B
FI_LIN_2
0.35
WS/VI
3
E363*1B
E363a
Lighting 2 of instrument panel
1) Light source 2
4
E363*1B
6
X501*1B
FI_LIN_2
0.35
GE/BL
3
E46
Inner door handle lighting, passenger's side, rear
1) Light source 5
4
E46*1B
FI_LIN
0.35
WS/VI
3
E368*1B
E368
Rear passenger door door trim panel lighting, top
1) Light source 6
4
E368*1B
3
X1776*1B
FI_LIN
0.35
GE/BL
11
X9*1B
FI_LIN
0.35
GN
4
X12*1B
with CFRP seat
without CFRP seat
FI_LIN
0.35
GE/BL
8
X12*1B
not used
FI_LIN
0.35
GE/BL
3
E32*1B
E32a
Footwell light, passenger’s side, rear
1) Light source 7
3
3
X1773*1B
FI_LIN_2
0.35
GE/BL
23
X28*1B
FI_LIN_2
0.35
GR
4
E38*1B
E38
Footwell light, front left
11) Light source 6
3
E38*1B
FI_LIN_2
0.35
GR
4
E39*1B
E39
Footwell light, front right
10) Light source 5
3
E39*1B
20
X434*1B
FI_LIN_2
0.35
SW/WS
4
E220*1B
E220a
Centre stack lighting
4) Light source 4
3
E220*1B
FI_LIN_2
0.35
WS/VI
4
E362*1B
E362a
Lighting, instrument panel
1) Light source 3

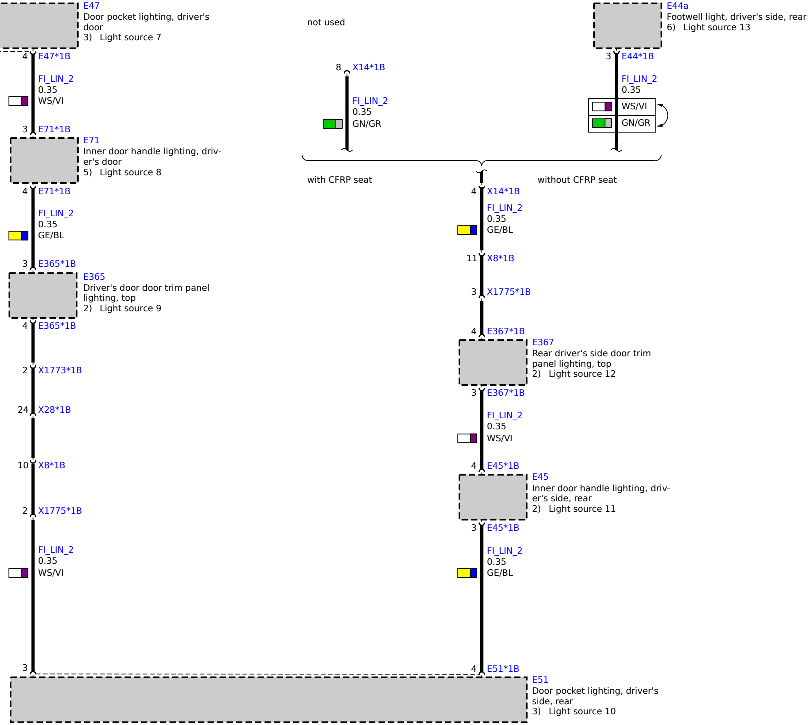
E47
Door pocket lighting, driver's door
3) Light source 7
4 E47*1B
FI_LIN_2
0.35
WS/VI
3 E71*1B
E71
Inner door handle lighting, driver's door
5) Light source 8
4 E71*1B
FI_LIN_2
0.35
GE/BL
3 E365*1B
E365
Driver's door door trim panel lighting, top
2) Light source 9
4 E365*1B
2 X1773*1B
24 X28*1B
10 X8*1B
2 X1775*1B
FI_LIN_2
0.35
WS/VI
3
not used
8 X14*1B
FI_LIN_2
0.35
GN/GR
E44a
Footwell light, driver's side, rear
6) Light source 13
3 E44*1B
FI_LIN_2
0.35
WS/VI
GN/GR
with CFRP seat
without CFRP seat
4 X14*1B
FI_LIN_2
0.35
GE/BL
11 X8*1B
3 X1775*1B
4 E367*1B
E367
Rear driver's side door trim panel lighting, top
2) Light source 12
3 E367*1B
FI_LIN_2
0.35
WS/VI
4 E45*1B
E45
Inner door handle lighting, driver's side, rear
2) Light source 11
3 E45*1B
FI_LIN_2
0.35
GE/BL
4 E51*1B
E51
Door pocket lighting, driver's side, rear
3) Light source 10