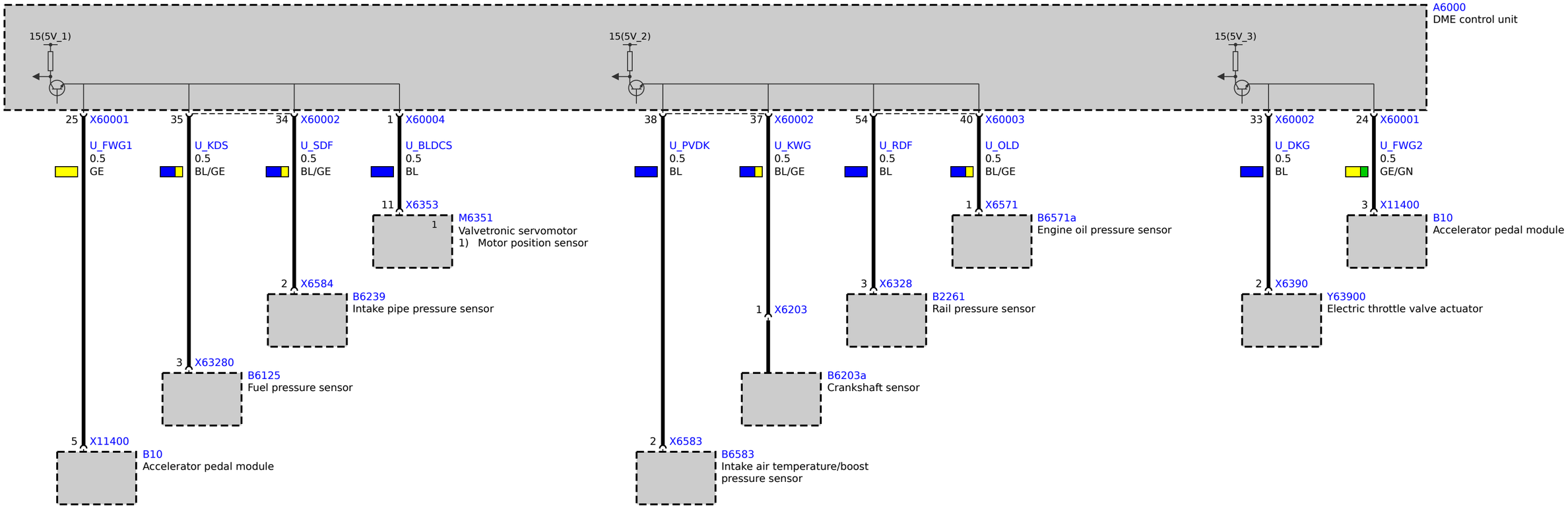
A6000
DME control unit
15(5V_1)
15(5V_2)
15(5V_3)
25 X60001
U_FWG1
0.5
GE
35
U_KDS
0.5
BL/GE
34 X60002
U_SDF
0.5
BL/GE
1 X60004
U_BLDCS
0.5
BL
11 X6353
1
M6351
Valvetronic servomotor
1) Motor position sensor
2 X6584
B6239
Intake pipe pressure sensor
3 X63280
B6125
Fuel pressure sensor
5 X11400
B10
Accelerator pedal module
38
U_PVDK
0.5
BL
37 X60002
U_KWG
0.5
BL/GE
1 X6203
B6203a
Crankshaft sensor
2 X6583
B6583
Intake air temperature/boost
pressure sensor
54
U_RDF
0.5
BL
3 X6328
B2261
Rail pressure sensor
40 X60003
U_OLD
0.5
BL/GE
1 X6571
B6571a
Engine oil pressure sensor
33 X60002
U_DKG
0.5
BL
2 X6390
Y63900
Electric throttle valve actuator
24 X60001
U_FWG2
0.5
GE/GN
3 X11400
B10
Accelerator pedal module