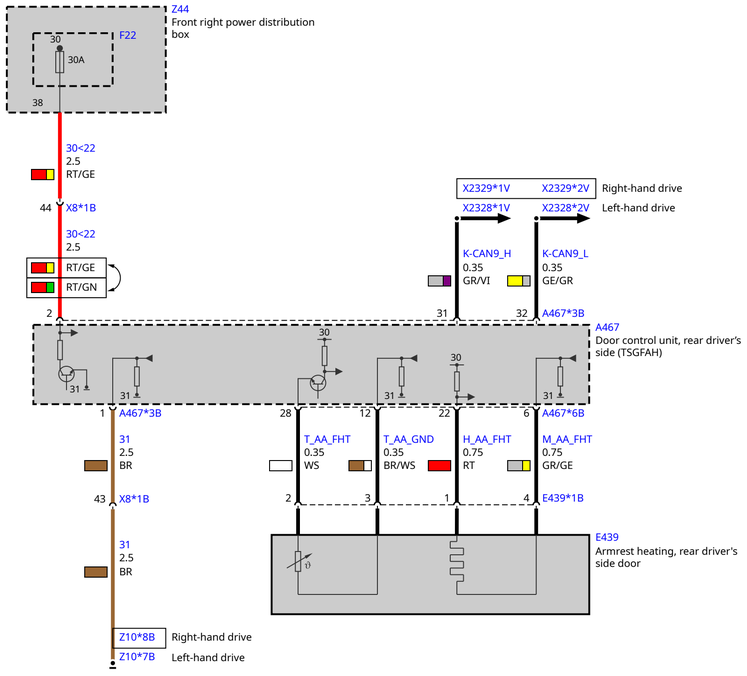
Z44
Front right power distribution box
F22
30
30A
38
30<22
2.5
RT/GE
44
X8*1B
30<22
2.5
RT/GE
RT/GN
X2329*1V
X2329*2V
Right-hand drive
X2328*1V
X2328*2V
Left-hand drive
K-CAN9_H
0.35
GR/VI
K-CAN9_L
0.35
GE/GR
2
31
32
A467*3B
A467
Door control unit, rear driver's side (TSGFAH)
1
A467*3B
28
12
22
6
A467*6B
31
2.5
BR
T_AA_FHT
0.35
WS
T_AA_GND
0.35
BR/WS
H_AA_FHT
0.75
RT
M_AA_FHT
0.75
GR/GE
43
X8*1B
2
3
1
4
E439*1B
31
2.5
BR
E439
Armrest heating, rear driver's side door
Z10*8B
Right-hand drive
Z10*7B
Left-hand drive

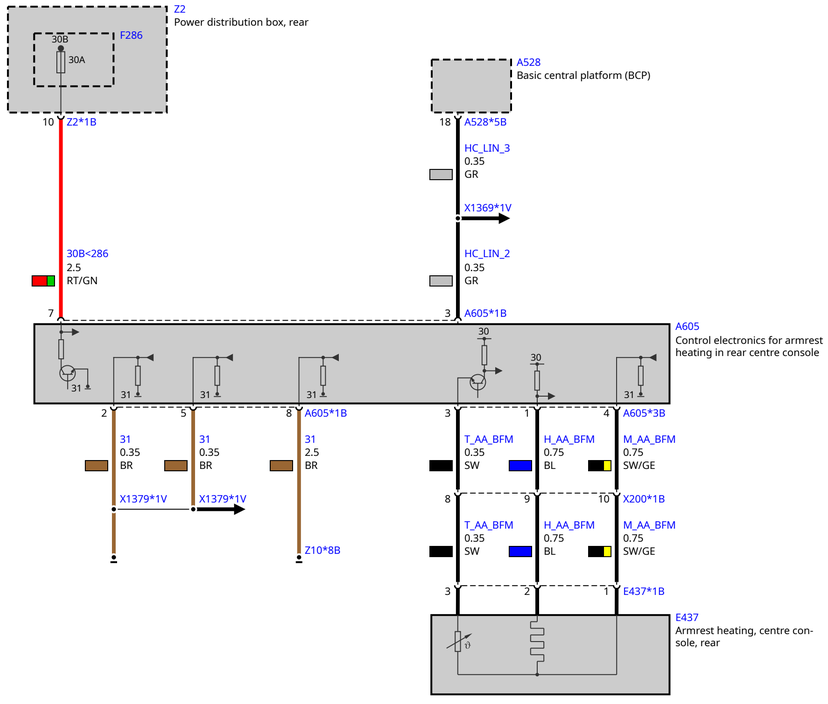
Z2
Power distribution box, rear
F286
30B
30A
10
Z2*1B
A528
Basic central platform (BCP)
18
A528*5B
HC_LIN_3
0.35
GR
X1369*1V
30B<286
2.5
RT/GN
HC_LIN_2
0.35
GR
7
3
A605*1B
A605
Control electronics for armrest heating in rear centre console
2
5
8
A605*1B
3
1
4
A605*3B
31
0.35
BR
31
0.35
BR
31
2.5
BR
T_AA_BFM
0.35
SW
H_AA_BFM
0.75
BL
M_AA_BFM
0.75
SW/GE
X1379*1V
X1379*1V
Z10*8B
8
9
10
X200*1B
T_AA_BFM
0.35
SW
H_AA_BFM
0.75
BL
M_AA_BFM
0.75
SW/GE
3
2
1
E437*1B
E437
Armrest heating, centre console, rear

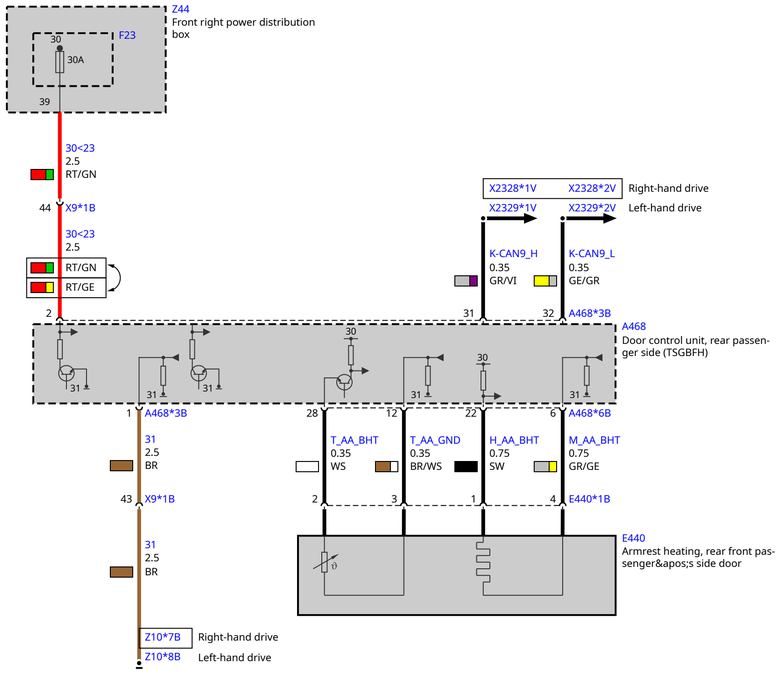
Z44
Front right power distribution box
F23
30
30A
39
30<23
2.5
RT/GN
44
X9*1B
30<23
2.5
RT/GN
RT/GE
X2328*1V
X2328*2V
Right-hand drive
X2329*1V
X2329*2V
Left-hand drive
K-CAN9_H
0.35
GR/VI
K-CAN9_L
0.35
GE/GR
2
31
32
A468*3B
A468
Door control unit, rear passenger side (TSGBFH)
1
A468*3B
28
12
22
6
A468*6B
31
2.5
BR
T_AA_BHT
0.35
WS
T_AA_GND
0.35
BR/WS
H_AA_BHT
0.75
SW
M_AA_BHT
0.75
GR/GE
43
X9*1B
2
3
1
4
E440*1B
31
2.5
BR
E440
Armrest heating, rear front passenger's side door
Z10*7B
Right-hand drive
Z10*8B
Left-hand drive