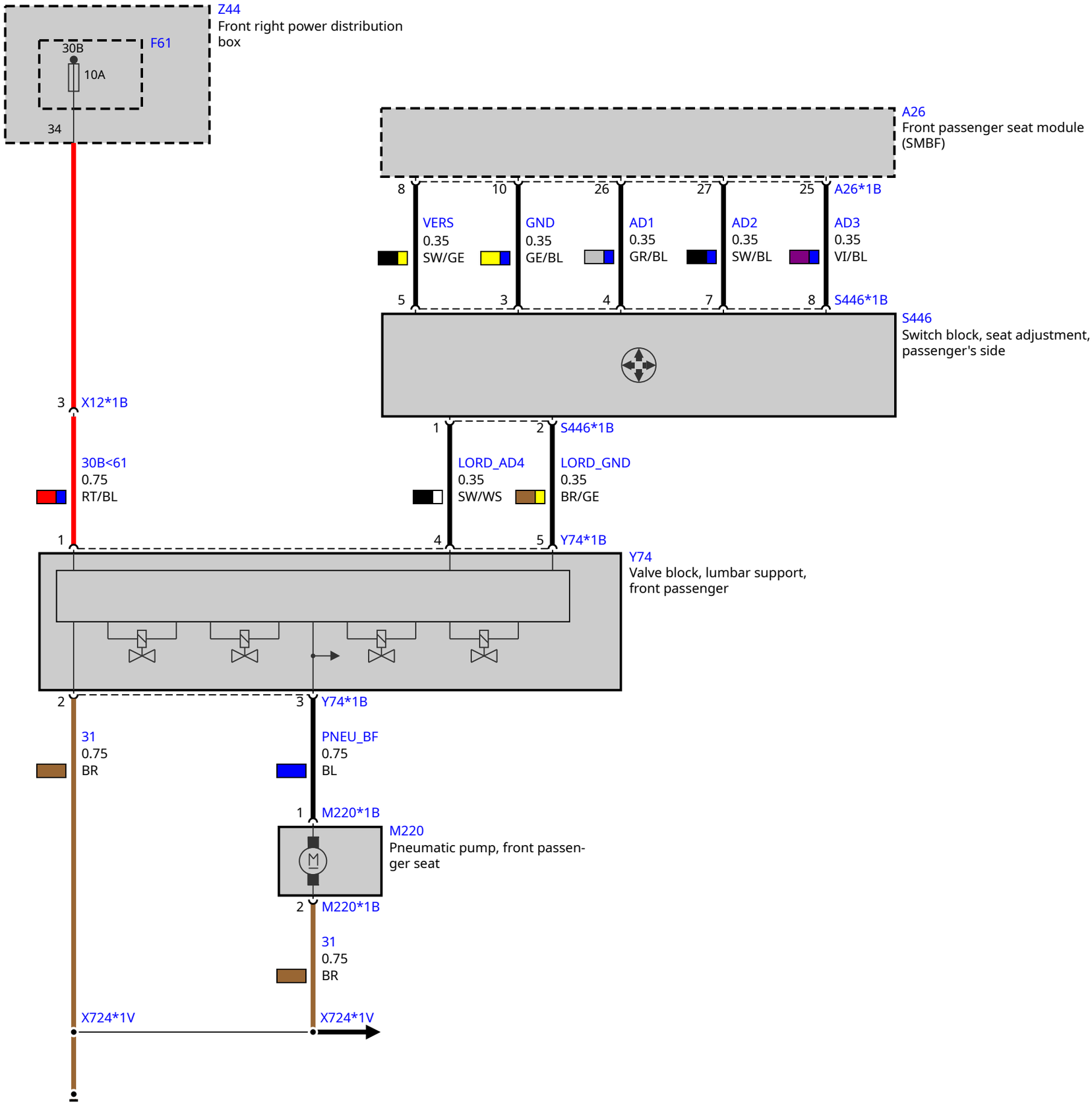
Z44
Front right power distribution box
F61
30B
10A
34
A26
Front passenger seat module (SMBF)
8
10
26
27
25
A26*1B
VERS
0.35
SW/GE
GND
0.35
GE/BL
AD1
0.35
GR/BL
AD2
0.35
SW/BL
AD3
0.35
VI/BL
5
3
4
7
8
S446*1B
S446
Switch block, seat adjustment, passenger's side
3
X12*1B
1
2
S446*1B
30B<61
0.75
RT/BL
LORD_AD4
0.35
SW/WS
LORD_GND
0.35
BR/GE
1
4
5
Y74*1B
Y74
Valve block, lumbar support, front passenger
2
3
Y74*1B
31
0.75
BR
PNEU_BF
0.75
BL
1
M220*1B
M220
Pneumatic pump, front passenger seat
2
M220*1B
31
0.75
BR
X724*1V
X724*1V