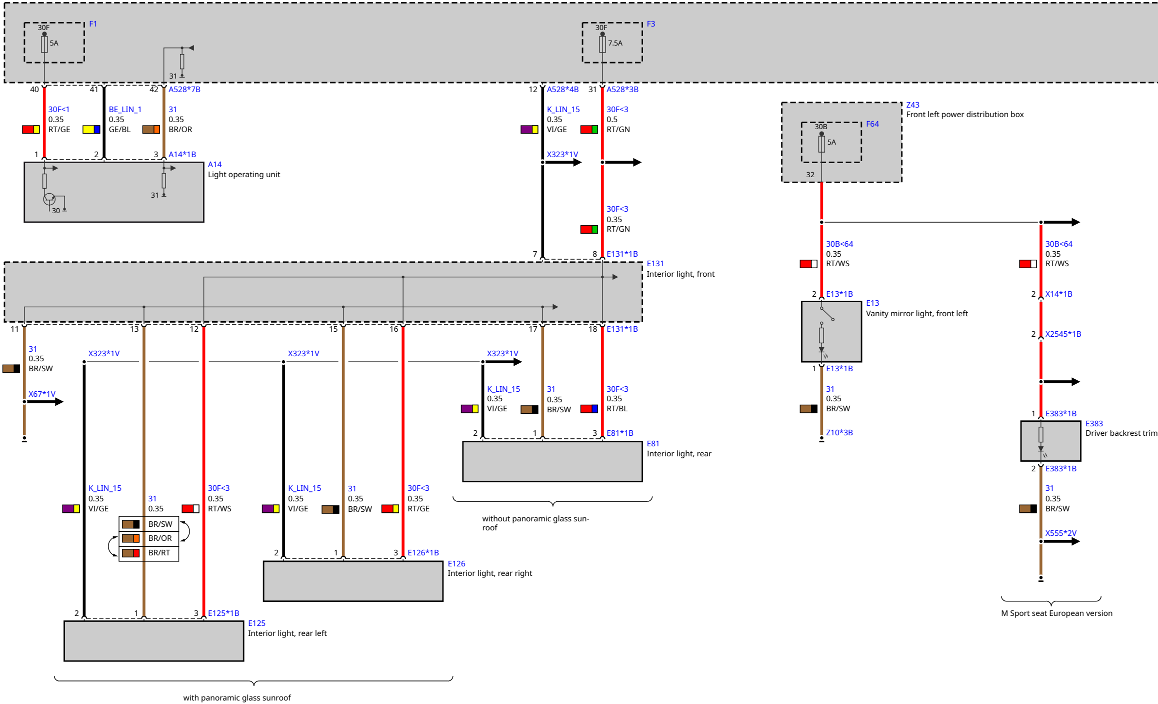
F1
30F
5A
31
40
41
42
A528*7B
30F<1
0.35
RT/GE
BE_LIN_1
0.35
GE/BL
31
0.35
BR/OR
1
2
3
A14*1B
A14
Light operating unit
30
31
F3
30F
7.5A
12
A528*4B
31
A528*3B
K_LIN_15
0.35
VI/GE
30F<3
0.5
RT/GN
X323*1V
30F<3
0.35
RT/GN
7
8
E131*1B
E131
Interior light, front
11
13
12
15
16
17
18
E131*1B
31
0.35
BR/SW
X67*1V
X323*1V
X323*1V
X323*1V
K_LIN_15
0.35
VI/GE
31
0.35
BR/SW
30F<3
0.35
RT/BL
2
1
3
E81*1B
E81
Interior light, rear
without panoramic glass sun-roof
K_LIN_15
0.35
VI/GE
31
0.35
30F<3
0.35
RT/WS
BR/SW
BR/OR
BR/RT
K_LIN_15
0.35
VI/GE
31
0.35
BR/SW
30F<3
0.35
RT/GE
2
1
3
E126*1B
E126
Interior light, rear right
2
1
3
E125*1B
E125
Interior light, rear left
with panoramic glass sunroof
Z43
Front left power distribution box
30B
F64
5A
32
30B<64
0.35
RT/WS
30B<64
0.35
RT/WS
2
E13*1B
E13
Vanity mirror light, front left
1
E13*1B
31
0.35
BR/SW
Z10*3B
2
X14*1B
2
X2545*1B
1
E383*1B
E383
Driver backrest trim
2
E383*1B
31
0.35
BR/SW
X555*2V
M Sport seat European version

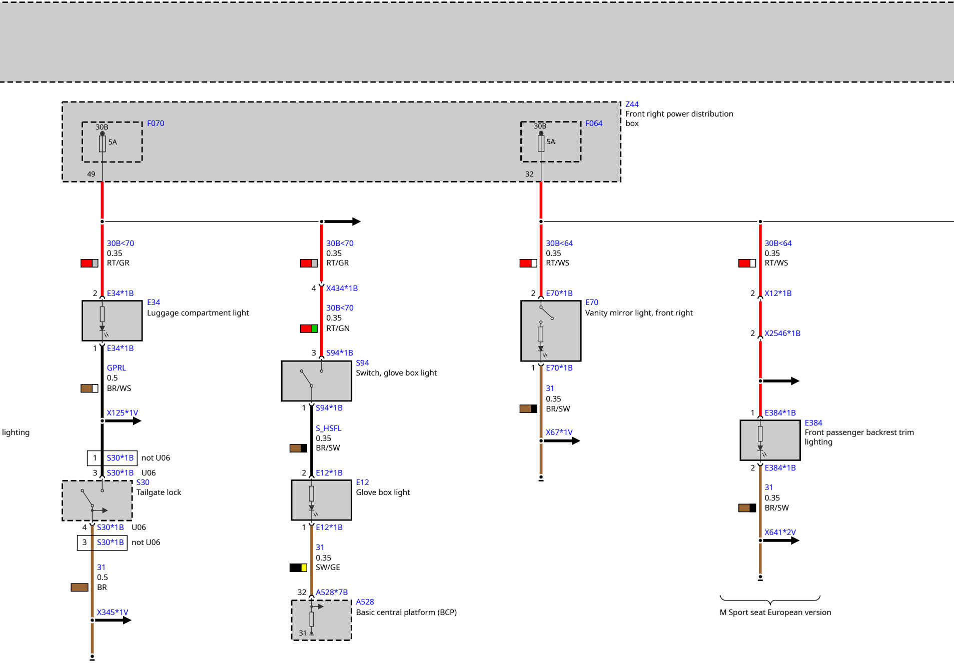
Z44
Front right power distribution box
30B
F070
5A
49
30B
F064
5A
32
30B<70
0.35
RT/GR
2 E34*1B
E34
Luggage compartment light
1 E34*1B
GPRL
0.5
BR/WS
X125*1V
lighting
1 S30*1B not U06
3 S30*1B U06
S30
Tailgate lock
4 S30*1B U06
3 S30*1B not U06
31
0.5
BR
X345*1V
30B<70
0.35
RT/GR
4 X434*1B
30B<70
0.35
RT/GN
3 S94*1B
S94
Switch, glove box light
1 S94*1B
S_HSFL
0.35
BR/SW
2 E12*1B
E12
Glove box light
1 E12*1B
31
0.35
SW/GE
32 A528*7B
A528
Basic central platform (BCP)
31
30B<64
0.35
RT/WS
2 E70*1B
E70
Vanity mirror light, front right
1 E70*1B
31
0.35
BR/SW
X67*1V
30B<64
0.35
RT/WS
2 X12*1B
2 X2546*1B
1 E384*1B
E384
Front passenger backrest trim lighting
2 E384*1B
31
0.35
BR/SW
X641*2V
M Sport seat European version

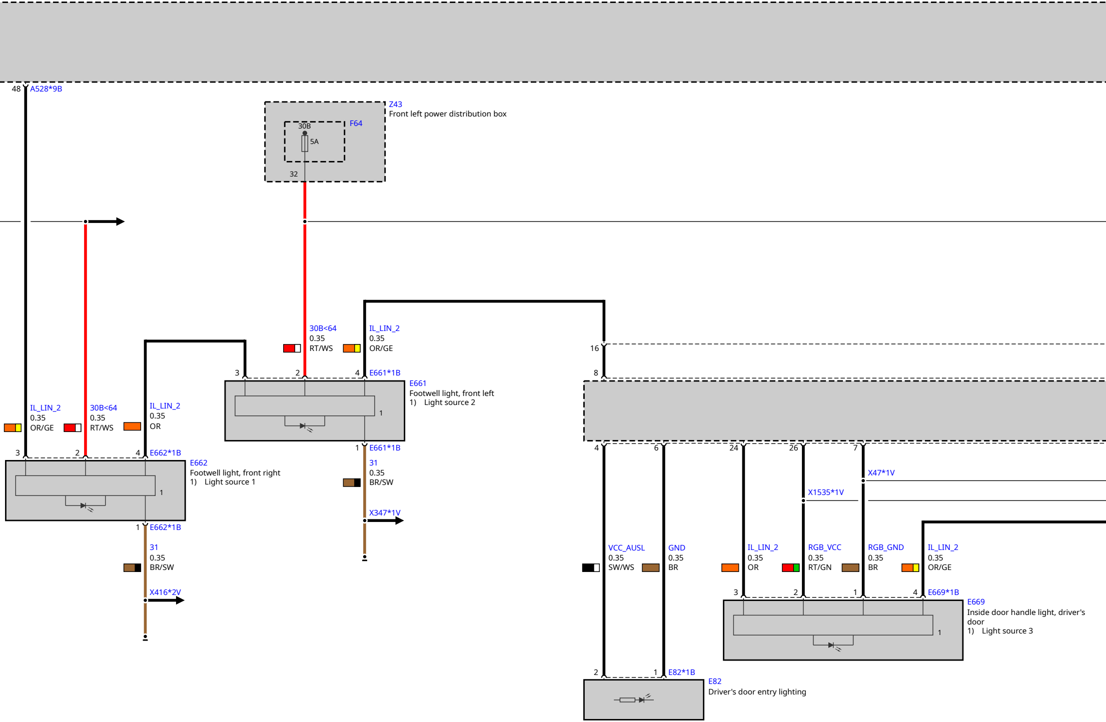
48
A528*9B
Z43
Front left power distribution box
F64
30B
5A
32
30B<64
0.35
RT/WS
IL_LIN_2
0.35
OR/GE
16
8
3
2
4
E661*1B
E661
Footwell light, front left
1) Light source 2
1
1
E661*1B
31
0.35
BR/SW
X347*1V
IL_LIN_2
0.35
OR/GE
30B<64
0.35
RT/WS
IL_LIN_2
0.35
OR
3
2
4
E662*1B
E662
Footwell light, front right
1) Light source 1
1
1
E662*1B
31
0.35
BR/SW
X416*2V
4
6
24
26
7
X47*1V
X1535*1V
VCC_AUSL
0.35
SW/WS
GND
0.35
BR
IL_LIN_2
0.35
OR
RGB_VCC
0.35
RT/GN
RGB_GND
0.35
BR
IL_LIN_2
0.35
OR/GE
3
2
1
4
E669*1B
E669
Inside door handle light, driver's door
1) Light source 3
1
2
1
E82*1B
E82
Driver's door entry lighting

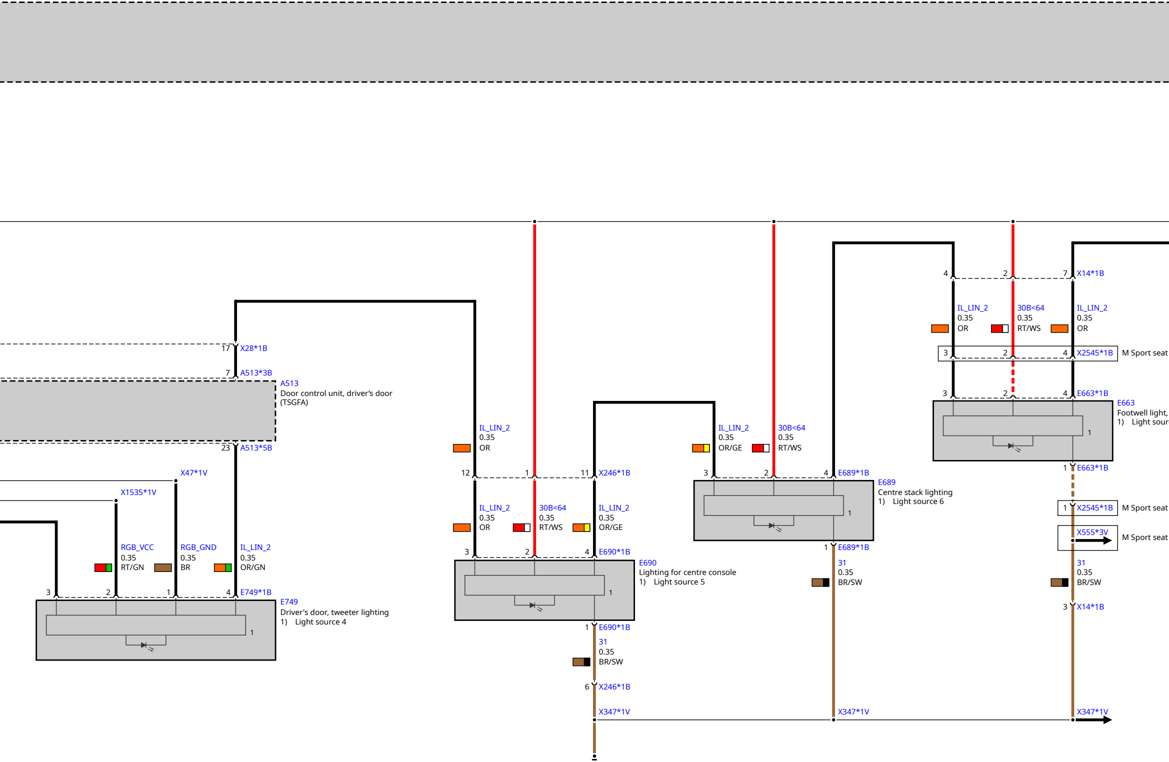
17 X28*1B
7 A513*3B
A513
Door control unit, driver's door
(TSGFA)
23 A513*5B
X47*1V
X1535*1V
RGB_VCC
0.35
RT/GN
RGB_GND
0.35
BR
IL_LIN_2
0.35
OR/GN
3
2
1
4 E749*1B
E749
Driver's door, tweeter lighting
1) Light source 4
1
IL_LIN_2
0.35
OR
12
1
11 X246*1B
IL_LIN_2
0.35
OR
30B<64
0.35
RT/WS
IL_LIN_2
0.35
OR/GE
3
2
4 E690*1B
E690
Lighting for centre console
1) Light source 5
1
1 E690*1B
31
0.35
BR/SW
6 X246*1B
X347*1V
IL_LIN_2
0.35
OR/GE
30B<64
0.35
RT/WS
3
2
4 E689*1B
E689
Centre stack lighting
1) Light source 6
1
1 E689*1B
31
0.35
BR/SW
X347*1V
4
2
7 X14*1B
IL_LIN_2
0.35
OR
30B<64
0.35
RT/WS
IL_LIN_2
0.35
OR
3
2
4 X2545*1B
M Sport seat
3
2
4 E663*1B
E663
Footwell light,
1) Light sour
1
1 E663*1B
1 X2545*1B
M Sport seat
X555*3V
M Sport seat
31
0.35
BR/SW
3 X14*1B
X347*1V

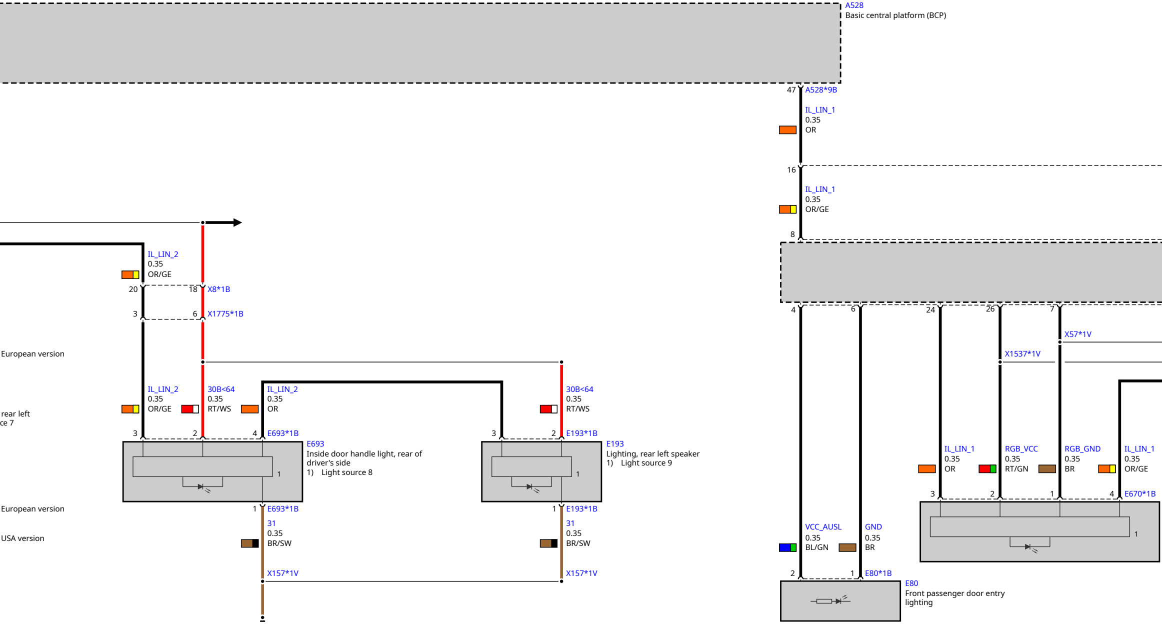
A528
Basic central platform (BCP)
47
A528*9B
IL_LIN_1
0.35
OR
16
IL_LIN_1
0.35
OR/GE
8
IL_LIN_2
0.35
OR/GE
20
18
X8*1B
3
6
X1775*1B
European version
IL_LIN_2
0.35
OR/GE
30B<64
0.35
RT/WS
IL_LIN_2
0.35
OR
30B<64
0.35
RT/WS
rear left
ce 7
3
2
4
E693*1B
3
2
E193*1B
E693
Inside door handle light, rear of driver's side
1) Light source 8
1
E193
Lighting, rear left speaker
1) Light source 9
1
European version
1
E693*1B
1
E193*1B
31
0.35
BR/SW
31
0.35
BR/SW
USA version
X157*1V
X157*1V
4
6
24
26
7
X57*1V
X1537*1V
IL_LIN_1
0.35
OR
RGB_VCC
0.35
RT/GN
RGB_GND
0.35
BR
IL_LIN_1
0.35
OR/GE
3
2
1
4
E670*1B
1
VCC_AUSL
0.35
BL/GN
GND
0.35
BR
2
1
E80*1B
E80
Front passenger door entry lighting

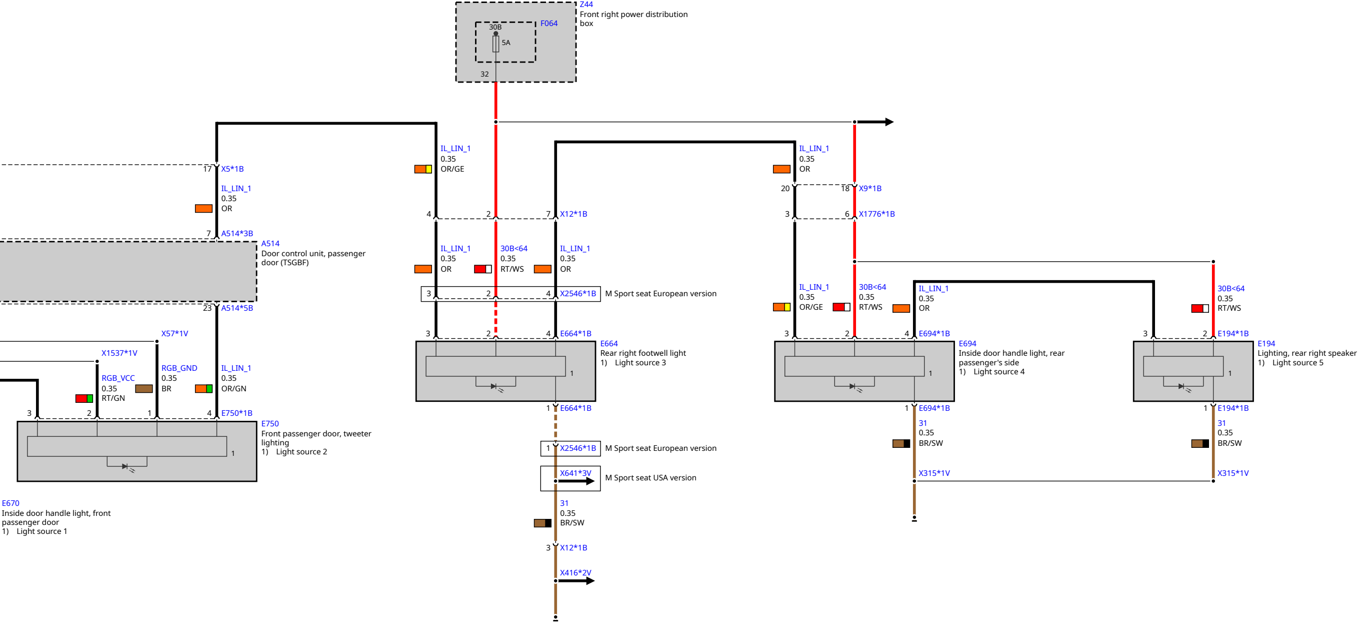
Z44
Front right power distribution box
F064
30B
5A
32
IL_LIN_1
0.35
OR/GE
17
X5*1B
IL_LIN_1
0.35
OR
7
A514*3B
A514
Door control unit, passenger door (TSGBF)
23
A514*5B
X57*1V
X1537*1V
RGB_VCC
0.35
RT/GN
RGB_GND
0.35
BR
IL_LIN_1
0.35
OR/GN
3
2
1
4
E750*1B
E750
Front passenger door, tweeter lighting
1) Light source 2
1
E670
Inside door handle light, front passenger door
1) Light source 1
4
2
7
X12*1B
IL_LIN_1
0.35
OR
30B<64
0.35
RT/WS
IL_LIN_1
0.35
OR
3
2
4
X2546*1B
M Sport seat European version
3
2
4
E664*1B
E664
Rear right footwell light
1) Light source 3
1
1
E664*1B
1
X2546*1B
M Sport seat European version
X641*3V
M Sport seat USA version
31
0.35
BR/SW
3
X12*1B
X416*2V
IL_LIN_1
0.35
OR
20
18
X9*1B
3
6
X1776*1B
IL_LIN_1
0.35
OR/GE
30B<64
0.35
RT/WS
IL_LIN_1
0.35
OR
3
2
4
E694*1B
E694
Inside door handle light, rear passenger's side
1) Light source 4
1
1
E694*1B
31
0.35
BR/SW
X315*1V
30B<64
0.35
RT/WS
3
2
E194*1B
E194
Lighting, rear right speaker
1) Light source 5
1
1
E194*1B
31
0.35
BR/SW
X315*1V